Borochi

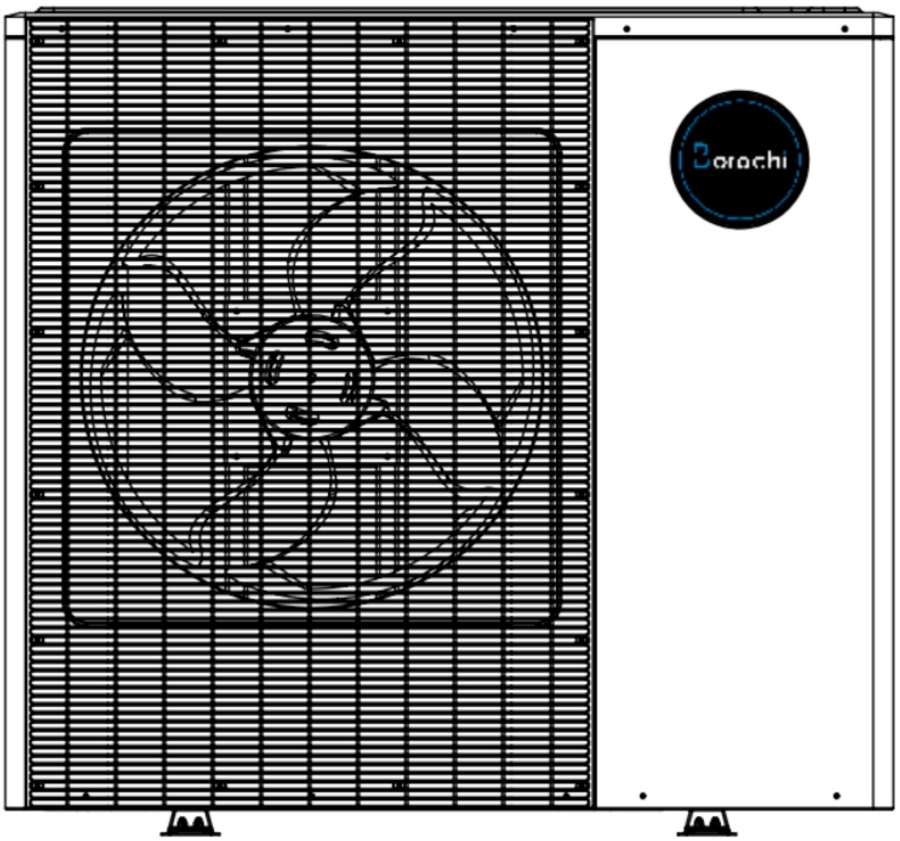

BWP-8/10 kW

Full DC Variable Frequency Integrated Heat Pump

User Manual

Foreword

Overview

This User Manual details the product information, application scenarios, installation guide, pipeline connection, electrical connection, commissioning methods, maintenance, troubleshooting and technical parameters of the Aura series air source heat pump produced by Borochi Climate Solutions GmbH. Before installing and using this product, please read this Manual carefully to fully understand the safety information and be familiar with the functions and features of the product to ensure safe and efficient operation.
This Manual is applicable to the following product models:
BWP-8kW (BEHR0080NNSP01)
BWP-10kW (BEHR0100NNSP01)
Please refer to the contents of this Manual according to the specific model used to ensure correct installation and use. If you have any questions, please contact the official technical support or authorized dealers for professional help.

Application

This Manual is applicable to end users and installation and maintenance personnel. Technical operations such as installation and wiring can be carried out by electricians, HVAC workers or technicians with professional qualifications to ensure the safety of personnel and the reliable operation of equipment. Please read this Manual carefully before operation and strictly follow the relevant instructions to avoid equipment damage or safety accidents caused by improper operation. If you have any questions, please consult the official technical support or authorized service provider.

Sign Description

Sign	Description
DANGER	Warning information on hazard with a high risk level. Death or serious injury may be caused if such hazard is not avoided.
WARNING	Warning information on hazard with a medium risk level. Death or serious injury may be caused if such hazard is not avoided.
CAUTION	Warning information on hazard with a low risk level. Minor or moderate injury may be caused if such hazard is not avoided.
NOTICE	No personal injury is involved. If such hazard is not avoided, it may lead to equipment damage, data loss, equipment performance degradation or other unforeseen consequences.
NOTE	No personal injury or equipment damage is involved. It is usually a supplementary explanation of the key information in the text.

Copyright ©

This Manual is copyrighted by Borochi Climate Solutions GmbH. Without the written permission of Borochi Climate Solutions GmbH, no organization or individual may extract, copy or disseminate part or all of this Manual without authorization. This Manual may be updated based on user or customer feedback. Please visit our website www.borochi.de to view the latest version.

Trademark Statement

Borochi is owned by Borochi Climate Solutions GmbH, and all other trademarks mentioned in this Manual are held by their respective owners.

Note

All products, services or features you purchase are subject to the commercial contract and related terms signed with Borochi Climate Solutions GmbH. Please note that some or all of the products, services or features described in this document may not be included in your actual purchase or use. Unless otherwise expressly provided in the contract, Borochi Climate Solutions GmbH ("the Company" for short) makes no express or implied warranties with respect to the contents of this document. The content of this document may be revised periodically due to product version updates or other factors. Unless otherwise agreed, this document is only a guide for use, and all its statements, information and suggestions do not constitute any form of express or implied warranty

Contents

Foreword **1**

1. Safety Instructions **6**

1.1 Statement 6

1.2 Personal Safety 6

1.3 Electrical Safety 7

1.4 Environmental Safety 7

1.5 Mechanical Safety 8

1.6 Chemical Safety 8

1.7 Safety Precautions 8

1.8 Maintenance Service Information 9

1.9 Refrigerant Removal and Unit Vacuuming 10

1.10 Usage of Unit 12

1.11 Additional Safety Instructions 13

1.12 Instructions for Unit Handling 14

2 Product Introduction **16**

2.1 Overview 16

2.2. Model Description 16

2.3 Label Description 17

2.4 Appearance Description 21

2.6 Working Principle 25

2.7 Operating Mode 27

2.8 Safety Protection 27

3 Transportation and Storage **28**

3.1 Transportation Requirements 28

3.2 Storage Requirements 28

4 Safety Area Setting and Condensate Discharge **29**

4.1 Description of Safety Area 29

4.2 Setting of Safety Area for Installation on Floor 29

4.3 Setting of Safe Area for Installation on Wall 33

4.4 Setting of Safe Area for Installation on Flat Roof 37

4.5 Instructions for Condensate Discharge 38

4.6 Condensate Discharge Design 38

5 Equipment Installation **41**

5.1 Inspection before Installation 41
5.2 Preparation of Tools and Instruments 41
5.3 Installation Requirements 43
5.4 Construction of Installation Foundation 45
5.5 Design of Windbreak Wall 46

6 Pipe Installation **47**

6.1 Safety Precautions 47
6.2 Installation Type of Pressure Pipeline 47
6.3 Minimum Circulating Water Volume 47
6.4 Requirements for Pressure Pipeline Components 47
6.5 Preparation for Pressure Pipeline Installation 47
6.6 Laying of Pressure Pipeline 48
6.7 System Pipe Connection 48
6.8 Pressure Relief and Exhaust Safety Devices 49
6.9 Connection of Product to Swimming Pool (Optional) 49

7 Electrical Connections **50**

7.1 Safety Precautions 50
7.2 Electrical Installation Requirements 50
7.3 Power Cord Connection 51
7.4 Wiring of Electric Control Box 57

8. Equipment Startup **60**

8.1 Inspection before Startup 60
8.2 Unit Startup 60

9 Delivery **61**

10 Fault Diagnosis **61**

10.1 Fault Message 61
10.2 Other Faults 61

11 Maintenance **61**

11.1 Safety Precautions 61
11.2 Safety Area Inspection 62
11.3 Equipment Cleaning 62
11.4 Enclosure Removal 62

11.5 Enclosure Installation 62
11.6 Inspection of Finned Radiators, Fans and Condensate Drainage 63
11.7 Inspection of Refrigerant Circuit 63
11.8 Inspection of Electrical Connection 64
11.9 Inspection of Wear of Small Shock-absorbing Foot Pad 64
11.10 Completion of Inspection and Maintenance 64

12 Repair and Service 65

12.1 Preparation for Refrigerant Circuit Repair 65
12.2 Removal of Refrigerant from Equipment 65
12.3 Removal of Refrigerant Circuit Components 66
12.4 Installation of Refrigerant Circuit Components 66
12.5 Filling of Refrigerant into Equipment 66
12.6 Completion of Repair and Service 66

13 Product Suspension 67

13.1 Temporary Suspension 67
13.2 Product Scrapping 67

14 Recycling and Disposal 68

14.1 Packaging Disposal 68
14.2 Refrigerant Disposal 68

15 Customer Service 68
16. Technical Parameters 69
17 Appendix 71

17.1 System Circulation Diagram 71
17.2 Fault Message Table 72

1. Safety Instructions

1.1 Statement

Before transporting, storing, installing, commissioning, using and maintaining the equipment, please be sure to read this Manual carefully, operate in strict accordance with the operation instructions and safety signs on the equipment, and observe the prompts such as "Danger", "Warning", "Caution" and "Note" in this Manual. Please ensure compliance with applicable international, national and regional standards and industry specifications.

This equipment must be used in an environment that meets the design requirements. Otherwise, equipment failure, functional abnormality or component damage caused by environmental non-compliance is not within the scope of quality warranty, and the Company does not assume any compensation liability for possible personal injury or property loss. All transportation, storage, installation, operation and maintenance work must strictly comply with relevant laws, regulations and standards.

Reverse engineering, decompiling, disassembling, modifying, implanting or other derivative operations on the equipment software are forbidden. No one is allowed to explore the internal implementation principle of the equipment, obtain software source code or infringe intellectual property rights in any way, or disclose any equipment software performance test results.

In addition, the Company is not responsible for equipment damage caused by force majeure (such as earthquakes, floods, fires, wars, typhoons and extreme weather), or damage caused by installation by unqualified personnel, misoperation, unauthorized disassembly, product modification, or improper third-party transportation and storage. Please confirm all relevant risks before operation and operate in strict accordance with this Manual and relevant standards.

1.2 Personal Safety

DANGER

Risk of burns or frostbite: When the unit is running, some parts are in a high or low temperature state. Direct touch (especially pipes not insulated) will cause burns or frostbite.

No touch to running fan: A high-speed rotating fan may cause serious injury.

WARNING

Shut down the machine or wearing personal protective equipment before operating the machine: Shut down the machine to cool it to normal temperature before you come into contact with it. If it is necessary to operate the machine in a warm state, wear appropriate personal protective equipment (such as high-temperature resistant gloves and antifreeze gloves) throughout the process.

Read this Manual carefully: Before operation, read this Manual and strictly abide by all safety signs on the equipment and safety precautions in this Manual.

CAUTION

Wear personal protective equipment: Wear appropriate personal protective equipment (such as anti-static clothing, insulating gloves, goggles and safety helmets) to avoid electric shock or burns caused by improper wearing (such conductive items as watches and bracelets).

First aid measures: First aid equipment should be available at the work site.

NOTICE

On-site inspection: Before operation, the equipment, tools and safety facilities should be fully inspected to ensure that there is no damage, defect or abnormality.

1.3 Electrical Safety

DANGER

Risk of live operation: Electrical connection, maintenance or operation when the equipment is energized can easily cause electric shock, short circuit, fire or explosion accidents. Before maintenance or overhaul, be sure to turn off the main power supply circuit. After power cutoff, wait at least 3 minutes to ensure that the electrical components (especially capacitors) are completely discharged.
Wiring, grounding and isolation measures: All electrical connections must comply with local regulations and international standards; for equipment that needs to be grounded, connect the protective ground wire first during installation and disconnect it last during disassembly; pay attention to isolation measures when using insulating tools to avoid accidental contact.

WARNING

Damage to electrical components: The use of damaged and substandard cables, plugs or connectors may cause circuit failure and potential electric shock.
Tool use: Special and inspected insulating tools must be used during operation, and signs such as "No Power On" shall be set up in the working area to ensure a safe working environment.

CAUTION

Operation process: Strictly follow the steps specified in this Manual. Do not change the circuit or installation sequence without authorization to ensure that safety protection measures are implemented.

NOTICE

Regular inspection: Regularly check all electrical contacts, lines and connection parts to confirm that the contact is firm and the insulation is intact. If any problems are found, the related parts should be repaired or replaced in time.

1.4 Environmental Safety

DANGER

Risk of harsh environment: The equipment shall not be installed in an unsuitable environment such as with flammable, explosive substances, thick smoke or extreme high temperature. Otherwise, it may cause fire, explosion or equipment failure.
Ensure that the installation location is well ventilated: When installing equipment in a closed or narrow space, ensure sufficient space and good ventilation to prevent suffocation caused by refrigerant leakage.

WARNING

Cable location requirements: The use of cables in high temperature environments may cause aging and damage to the insulation layer. The distance between the cable and the heating device or the periphery of the heat source area should be at least 30mm.

CAUTION

Installation location requirements: Install the equipment at a dry, ventilated, water-free location away from fire sources, heat sources and direct light
Environmental monitoring: Regularly detect the temperature, humidity, water accumulation and other environmental factors that may affect the operation of equipment in the installation environment.

NOTICE

Storage and transportation: Place the equipment and batteries in a dry, ventilated and stable area during storage and transportation to prevent damage to equipment or components due to improper environment.

1.5 Mechanical Safety

DANGER

Risks of handling at height and heavy object handling: When working at height or carrying heavy equipment, if effective protection (wearing safety belts, helmets, using stable tools, etc.) is not taken, it may cause falling, collision injuries or equipment damage.
Equipment structure damage: Do not drill holes on the equipment or modify the equipment enclosure to prevent damage to the sealing and internal components, causing short circuits, refrigerant leakage or other accidents.
Risk of improper installation: Ensure that the equipment is firmly installed to avoid falling due to improper installation.

WARNING

Equipment stability: The equipment must be placed firmly without tilting. Tipping over may cause damage or personal injury.
Tools and protective measures: All operating tools must be inspected by professional institutions. When the equipment is handled at height or a heavy object is handled, safety warning areas should be set up, guardrails should be installed, and "No Entry" signs should be hung to ensure the safety of operators.
Handling and transportation specifications: The equipment must be placed firmly during handling and transportation, and tilting or violent vibration is prohibited; operators should select appropriate handling tools according to the weight and size of the equipment to avoid internal damage caused by falling or collision.
Prevent cuts during operation: Please pay attention to some sharp edges or components during the disassembly and installation of the equipment to prevent injuries.

NOTICE

Site cleaning: After the equipment is installed and transported, the residual packaging materials, tools and other debris on site should be cleaned up to prevent secondary damage to the equipment.

1.6 Chemical Safety

DANGER

Professional operation: This equipment contains flammable refrigerant R290. To ensure personal and equipment safety, operations involving the refrigerant system must be performed by technicians with professional knowledge and legal qualifications. Unauthorized operation is strictly prohibited.
Refrigerant leakage: Once the refrigerant leaks, if the unit is indoors, please open the doors and windows for ventilation immediately. If the unit is outdoors, please close the doors and windows immediately to prevent the refrigerant from entering. Be careful not to use open flames.

1.7 Safety Precautions

Qualification of operators

DANGER

1. Refrigerant circuits containing flammable refrigerants can only be operated under safety supervision. Such operations must be carried out in accordance with EN 378 Part 4 or IEC 60335-2-40, and the operators must have competence certification from an industry recognized body.
2. Brazing and welding operations on refrigerant circuits must be performed by qualified personnel certified to ISO 15614-1 and in accordance with AD 2000. According to the Pressure Equipment Directive (2014/68/EU), brazing and welding processes at reservoir connections must be performed by qualified personnel
3. The operation of electrical equipment can only be performed by qualified electricians.

4. Each work procedure that affects safety can only be performed by personnel with corresponding qualification. Examples of such work procedures include: disconnecting the refrigerant circuit; opening sealing components; opening ventilation enclosures.
5. Before the initial commissioning, the installation personnel or qualified personnel authorized by the system owner must conduct a comprehensive inspection of all safety-related key points.

The equipment contains flammable refrigerants

WARNING

1. The equipment uses Class A3 flammable refrigerants and should be properly protected during storage to prevent mechanical damage.
2. Do not use methods other than those recommended by the manufacturer to accelerate defrosting or cleaning of equipment.
3. The equipment should be stored in an environment without a continuous ignition source (such as open flames, gas devices or electric heaters).
4. Do not ignite or extinguish refrigerants that may have no odor to prevent danger.

Installation requirements

CAUTION

1. Valves, pipes and fittings should be protected as much as possible from adverse environmental influences, such as the risk of pipe and fitting blockage due to dust accumulation.
2. The pipeline should be designed with sufficient expansion and contraction margins.
3. The piping design and installation of the refrigeration system should minimize the risk of damage to the system caused by hydraulic shock.
4. Steel pipes and components must be protected against corrosion with an anti-rust coating before any insulation treatment.

1.8 Maintenance Service Information

Maintenance requirements: All maintenance work must be carried out strictly in accordance with the manufacturer's recommendations.
Safety inspection: Before working on systems containing flammable refrigerants, carry out systematic safety inspection, including leak detection and risk assessment, to minimize the risk of fire or explosion.
Operation procedures: All on-site personnel must understand the specific content of the operation and its potential risks. They should avoid working in confined spaces. The operation area should be isolated and flammable materials removed to ensure a safe operating environment. The operation must be carried out under controlled procedures to ensure that no flammable gases or vapors are accidentally released during the entire operation.
Provision of fire extinguishers: Dry powder or carbon dioxide fire extinguishers should be provided near the filling area.
Hot work management: If the refrigeration system and its components are to be hot worked, appropriate fire extinguishing equipment must be available.
No ignition sources: During operations related to the refrigeration system, it is strictly prohibited to use open flames, smoke or use any equipment that may cause ignition. All potential ignition sources must be removed and a "No Smoking" warning sign must be posted before operation.
Ventilation requirements: Before starting the system or performing hot processing, ensure that the working area is well ventilated. Continuous ventilation should be maintained throughout the operation process to discharge the refrigerant that may be released to the outside in a timely and safe manner.
Parts replacement: If electrical components need to be replaced, parts that meet the equipment requirements and applicable standards must be used, and the maintenance and service guidelines provided by the manufacturer must always be followed. The manufacturer's technical support department should be consulted when necessary.
Refrigeration equipment inspection:

1. The refrigerant charge should match the size of the room where the refrigerant components are installed;
2. Ventilation equipment and exhaust vents should operate normally without any obstruction;
3. If the system uses an indirect refrigeration circuit, check whether there is refrigerant leakage in the secondary circuit;
4. The markings on the equipment should always be clearly visible, and blurred or detached markings must be repaired or replaced in time;
5. The installation location of refrigeration pipes or components should avoid contact with any substances that may corrode them, unless these components themselves are made of corrosion-resistant materials or effective anti-corrosion measures have been taken.

Electrical equipment inspection: Repair and maintenance of electrical components must include initial safety inspection and component inspection procedures. If a fault related to safety is found, it is strictly forbidden to turn on the power supply before the fault is completely eliminated. If the fault cannot be repaired immediately but the equipment must continue to operate, appropriate temporary solutions must be taken and the situation must be reported to the equipment owner to ensure that all relevant parties are aware of it.

The initial safety inspection shall include:
1. Discharge the capacitor in a safe manner to prevent sparks;
2. When filling, recovering or purging the system, ensure that no live electrical parts or wires are exposed;
3. Ensure that the grounding connection is continuous and reliable.

Sealed electrical component inspection: Check cables for wear, corrosion, excessive pulling, vibration, sharp edges or other adverse environmental factors. Assess the potential risk of cable aging or continuous vibration caused by running parts such as compressors and fans. Sealed electrical components should not be repaired.

Detection of flammable refrigerants: In any case, do not use tools that may cause fire sources, such as halide torches and other leak detection devices involving open flames, to check or detect refrigerant leaks.

Recommended leak detection methods include:
1. **Electronic leak detector:** It can be used to detect refrigerant leakage, but its sensitivity to flammable refrigerants may be insufficient and may need to be recalibrated. It must be calibrated in a refrigerant-free environment and ensure that it will not become a potential ignition source. It should be set to detect a certain percentage of the lowest flammable limit (LFL) of the refrigerant (up to 25%) and calibrated according to the specific refrigerant used.
2. **Leak detection fluid:** It is suitable for most refrigerants, but chlorine-containing detergent shall be avoided to prevent corrosion of copper pipes due to reaction with refrigerant.
3. **Other methods:** Bubble method, fluorescent agent method and so on can also be used.

CAUTION

1. If a leak is suspected, all open flames must be removed/extinguished. If a refrigerant leak is found and brazing is required, all refrigerant must be recovered from the system or isolated in the part of the system away from the leak point by closing the valve. Refrigerant should be removed in accordance with the provisions of 1.9.
2. Sealed electrical components should not be repaired.
3. Before and during brazing, the system must be purged with oxygen-free nitrogen (OFN).

1.9 Refrigerant Removal and Unit Vacuuming

CAUTION

The equipment should be labeled to indicate that it is out of service and the refrigerant has been drained. The label should be dated and signed. For equipment containing flammable refrigerants, ensure that there is a label on the equipment indicating that the equipment contains flammable refrigerants.

Standard operating procedures should be followed when the refrigerant circuit is removed for maintenance or the system is operated for any other purpose. For systems using flammable refrigerants, special attention must be paid to their flammable properties and best practices must be strictly followed. It is recommended to follow the following procedures:
1. Recycle the refrigerant safely in accordance with relevant local and national regulations;

2. Empty the system;
3. Purge the circuit with inert gas (optional for A2L refrigerants);
4. Drain the system again (optional for A2L refrigerants);
5. If it is necessary to open the circuit with flame, keep the purging process continuous and maintain inert gas;
6. After completing the above steps, open the refrigerant circuit.

Preparation before operation

Before refrigerant recovering and filling, the following preparations must be completed:
1. Be familiar with the equipment structure and its operation mode;
2. Cut off the system power supply;
3. If necessary, prepare mechanical auxiliary equipment for handling refrigerant cylinders;
4. Wear complete personal protective equipment correctly;
5. Keep the recovering process under the supervision of qualified personnel;
6. Collect oil and refrigerant samples for necessary analysis before reusing the recovered refrigerant.

Correct recovery of refrigerant

1. The refrigerant must be recovered into a special recovery cylinder that meets the requirements, and compressed air or oxygen shall not be used to purge the refrigeration system.
2. When purging the refrigerant circuit, fill the system with inert gas to break the system vacuum, continuously fill it to the working pressure, discharge it to the atmosphere, and vacuumize the system again. This process shall be repeated until no refrigerant remains in the system.
3. The system should be vacuumized and exhausted to atmospheric pressure to ensure safe operation. Ensure that the vacuum pump outlet is away from potential ignition sources and ventilation measures are taken.

Refrigerant filling

In addition to the normal filling process, the following requirements should be followed:
1. Ensure that the filling equipment is free of no cross contamination and different refrigerants are not mixed; hoses and pipelines should be shortened as much as possible to reduce residual refrigerant.
2. Place the cylinder in a safe position correctly according to the instructions.
3. Before filling, reliably ground the refrigeration system.
4. After the filling, make and label the system immediately.
5. Be careful during operation to avoid overfilling the system.

System inspection and testing

Before refilling the system, have a pressure test with a suitable purge gas. After filling is completed and before commissioning begins, perform a leak test. Carry out another leak test before leaving the work site.

Other precautions

1. When removing refrigerant from the system for maintenance or decommissioning operations, follow standard operating procedures to ensure that all refrigerant can be removed safely and completely.
2. When transferring refrigerant to cylinders, use suitable cylinders specially designed for refrigerant recovery. Prepare a sufficient number of cylinders to contain all the refrigerant in the system. All cylinders must be clearly marked with the type of recycled refrigerant and equipped with a functioning pressure relief valve and shut-off valve. Empty cylinders should be vacuumized before being recycled and cooled when conditions permit.
3. The recovery equipment must be in good working condition, the operator should be familiar with the equipment instructions, and the equipment must be suitable for the recovery of flammable refrigerants. If you have any question, please contact the equipment manufacturer in time. At the same time, a calibrated weighing scale should be provided to ensure that hoses and quick connectors are leak-free and in good condition.
4. The recovered refrigerant should be stored in the correct recovering cylinders in strict accordance with local regulations, and relevant waste transfer and treatment records should be kept. Different types of refrigerants must not be mixed in recovering equipment or cylinders.
5. To remove compressor or discharge compressor oil, vacuumize it to the specified level first to ensure that there is no residual flammable refrigerant in the lubricating oil. Do not use open flames or any ignition source

to heat the compressor body to accelerate the process, but discharge oil in a safe manner. Use the recovering equipment and cylinders conforming to relevant standards and specifications.
6. Vacuumize the refrigerant system as thoroughly as possible. If this is not possible, a manifold should be made to remove the refrigerant from different parts of the system in stages.
7. Before the recovery operation begins, correctly place the cylinder on the weighing equipment, start the recovery machine and operate it strictly in accordance with the equipment instructions.
8. During the recycling process, do not overfill the cylinder. The filling amount of liquid refrigerant should not exceed 80% of the cylinder volume.
9. Even if it is a temporary situation, the internal pressure of the cylinder should not exceed its maximum working pressure.
10. After the recovery is completed and the cylinders are filled correctly, the cylinders and recovery equipment should be removed from the site in a timely manner, and all isolation valves on the equipment should be closed.
11. Recovered refrigerant that has not been cleaned and inspected should not be filled into other refrigeration systems to prevent pollution and equipment damage.

1.10 Usage of Unit

1. This product is an integrated air source heat pump outdoor unit. It uses outdoor air as a heat source for heating and domestic hot water supply in residential buildings.
2. This product is only suitable for outdoor installation, and the exhaust air must be able to diffuse freely. It shall not be used for any other purpose.
3. This product is for home use only and is not suitable for the following places:

- Locations where mineral oil mist, oil spray or vapor is present
- Locations containing corrosive gases (such as sulfurous acid gas)
- Locations with strong electromagnetic interference
- Locations where flammable gases, carbon fiber or combustible dust may leak or suspend
- Locations with high salt content in the air (such as the seaside)
- Locations with large voltage fluctuation
- Vehicles or ships
- Locations with acidic or alkaline vapor

DANGER

Explosion risk: Refrigerant leakage may form a flammable or explosive environment in the surrounding air. Take the following measures to prevent fire and explosion in safe areas:
1. Keep away from ignition sources, including open flames, sockets, hot surfaces, light switches, lamps, electrical equipment with ignition source not eliminated, and mobile devices with built-in batteries (such as mobile phones and smart watches).
2. Do not use spray or other flammable gas in the safe area.

CAUTION

Any improper use is prohibited:
1. Do not flush the equipment.
2. Do not place any objects on the equipment (top plate).
3. Do not climb, sit or stand on top of the equipment.
4. Do not remove, block or bridge safety equipment.
5. Do not make any changes: Do not modify the outdoor unit, inlet and outlet pipelines, electrical connections/cables or surrounding environment. Do not remove any parts or seals.

NOTICE

Any other use not specified in the following instructions, or beyond the scope of use specified in this document, shall be considered as improper use. Any direct commercial or industrial use is also considered as improper use.

Provisions to be observed:
1. Local installation regulations.
2. Regulations related to accident prevention.
3. Regulations on environmental protection.
4. Statutory requirements for pressure equipment: Pressure Equipment Directive (2014/68/EU).
5. Code of practice of relevant industry associations.
6. Safety regulations of certain countries.
7. Regulations and guidelines applicable to the operation, service, maintenance, repair and safety of refrigeration, air conditioning and heat pump systems containing flammable and explosive refrigerants.
Work in a safe area: The outdoor unit contains flammable refrigerant R290 (propane). In the event of a leak, the refrigerant may create a flammable or explosive environment in the surrounding air. Please refer to the 4 "Safety Area Setting and Condensate Drainage" to define the safety area.
Permitted tools: All tools used in the safe area must be designed and be explosion-proof as required by relevant standards and regulations applicable to A2L and A3 safety group refrigerants, such as brushless equipment (cordless handling containers, installation aids and screwdrivers), vacuumizing equipment, vacuum pumps, conductive hoses and mechanical tools made of non-sparking materials.
Electrical equipment: must meet the requirements of explosion hazard zone 2. Flammable materials such as sprays or other flammable gases shall not be used. Tools must be suitable for the pressure range used and in a good state of maintenance.

1.11 Additional Safety Instructions

Power supply and electrical safety

1. Completely disconnect the power supply of the equipment and its accessories through an independent fuse or power isolation switch.
2. Check whether the system is completely powered off. Some circuit boards may still have residual voltage. Wait for at least 4 minutes after power cutoff.
3. Do not operate electrical components with wet hands.
4. Wear personal protective equipment (PPE) to prevent electric shock and equipment damage.
5. To prevent electrostatic discharge, touch the grounded object to release static electricity before operation.
6. Ensure that all electrical connections meet the minimum length (such as indoor and outdoor cables ≥3m) and grounding requirements, and be away from interference sources (such as TVs and radios).

Refrigerant-related Risk Prevention (R290)

General operating requirements

1. All operations must comply with local regulations, manufacturer's guidelines and standards.
2. Unauthorized operation may bring safety risks or affect the warranty.
3. Operations involving electrical, high pressure, refrigerants, etc. must be performed by qualified technicians.

General Precautions

1. Handle R290 by authorized personnel as it is a flammable gas that can cause an explosion when mixed with air.
2. Before operating the refrigerant system, ensure good ventilation, especially in the ground floor area.
3. Do not drill or heat on the circuit containing refrigerant.
4. Properly label and store components that contain or contained refrigerant.

Leakage prevention and emergency response

1. Use a special explosion-proof R290 leak detector to detect leakage, and prevent sparks.
2. In case of leakage, immediately cut off the power supply, evacuate personnel, maintain ventilation and remove ignition sources.
3. Have the system repaired or reactivated as necessary by professional technicians.

Exposure risk

1. Avoid direct contact between skin and liquid/gaseous refrigerant to prevent frostbite or burns.
2. Do not inhale refrigerant vapor, but wear appropriate PPE during operation.

Fire and explosion prevention

1. Do not use open flames or tools that can generate sparks.
2. Provide CO_2 or dry powder fire extinguishers during the discharge, replenishment of refrigerant or welding operations.
3. Define the operation area as a "temporary flammable area" and strictly control the fire source.

Maintenance and operation specifications

1. Turn off the power supply and wait for the system to cool down before maintenance.
2. Ensure a safe distance of at least 3m around the equipment to prevent the accumulation of combustible mixture.
3. Before performing refrigerant operations, remove flammable materials and ignition sources around the heat pump.

Installation and structural safety

1. The equipment must be installed on a load-bearing foundation, away from public areas or restricted areas.
2. Use components and accessories specified by the manufacturer.
3. Take reinforcement measures according to environmental conditions (with such as strong winds and earthquakes taken into account).
4. Do not install exhaust valves that are prone to gas leakage indoor. If necessary, lead the exhaust outlet to the outdoors.

Water circulation system and water leakage response

1. Refrigerant may seep into the water circulation system. After maintenance, the system should be exhausted and ventilation must be maintained.
2. In case of water leakage, the power supply should be cut off at an external isolation point to prevent electric shock and burns.

Deicing and defrosting measures

1. Do not use hard object to deice. Confirm that there is no refrigerant leakage before using an electric heater.
2. If frosting occurs frequently, install a heating wire or fan heater suitable for R290.

Storage safety

1. Keep the storage environment well ventilated and away from fire sources, with a temperature range of -25°C~70°C.
2. Use the original packaging for storage, prepare an explosion-proof plan and limit the storage quantity.

1.12 Instructions for Unit Handling

1. Dispose of the equipment according to relevant national and local regulations as it uses flammable refrigerants.
2. Do not dispose of the equipment as ordinary municipal waste. Electrical products should be sorted and disposed of through special recycling channels.
3. Please use the electrical appliance recycling service provided by the local government or professional organization. For detailed information on electrical appliance recycling, please consult the relevant local authorities.
4. Improper disposal (such as landfill or random discarding) may cause harmful substances in the equipment to seep into groundwater and enter the food chain, endangering human health and environment.

WARNING: Risk of fire

2 Product Introduction

2.1 Overview

The full DC variable frequency integrated heat pump of Borochi integrates heating, cooling and domestic hot water functions. It uses R290 environmentally friendly refrigerant and full DC variable frequency control technology. It features high efficiency, energy saving, stable operation, low carbon and environmental protection, and easy installation. This series of products adopts an integrated design and modular combination structure, supports flexible parallel operation of multiple units. It is widely used in a variety of application scenarios, and is an ideal solution to achieve the goals of building energy conservation and carbon neutrality.
This product adopts a single-stage compression system cycle. While ensuring the high operating performance of the unit, it uses a low proportion of vulnerable mechanical structural parts, realizing high whole machine logic control reliability. It also uses core components of super first-tier brands to greatly reduce the potential maintenance probability during the product life cycle and improve customers' comfortable use experience.
The metal sheet metal parts and pipe connectors of this product have been overall hardened in structure, greatly improving the rigidity of the unit enclosure. At the same time, a high-strength corrosion-resistant coating is sprayed on the sheet metal surface to enhance the chemical and weathering corrosion resistance and extend the service life of the unit.

2.2. Model Description

This document covers two models of products, taking BEHR0100NNSP01 as an example.

B E H R 0100 N N S P 01

Letter	Meaning	Description
B	**Borochi**	**Brand**
E	**Integrated heat pump oriented to European market**	**Product classification**
H	**Air conditioner main unit/outdoor unit**	**To identify indoor and outdoor units**
R	**Variable frequency/R290**	**Compressor type**
0100	**10kW heating capacity**	**Unit capability**
N	**Air cooling**	**Cooling type**
N	**Normal temperature type**	**Application scenarios of equipment**
S	**230V/50Hz/1Ph**	**Power supply specification**
P	**Built-in water pump**	**Equipment configuration**
01	**Version No.**	**Identify different versions of the same configuration**

2.3 Label Description

Unit identification

Please always pay attention to the safety-related signs on the unit body, read them carefully and fully understand their meanings. Do not tear off any safety warning signs. The signs and their meaning are as follows:

Sign	Explanation
	R290 flammable and explosive refrigerant
	No contact with open flames
	Read the maintenance information and technical instructions
	There are potential dangers when the equipment is running. Please take protective measures when operating the equipment
	There is high voltage when the equipment is running. Please ensure that the unit is powered off when operating the equipment
	Please use the equipment reasonably. There is a risk of explosion when the equipment is used in extreme cases.
	Keep the equipment away from areas accessible to children.
	Do not use water to extinguish fires.
	Protective grounding mark, used to indicate the connection position of the protective ground wire
	This side up. No tiling or upside down.
	When the equipment is scrapped, it should be recycled in accordance with local regulations
	The equipment conforms to CE certification standards.

Waterway connecting pipe identification

Sign	Explanation
INLET	**Water inlet:** The interface where the return water from the user system flows into the heat pump unit.
OUTLET	**Water outlet:** The interface where the heated (or cooled) water flows out of the heat pump unit and enters the user system.

Nameplate

The air source heat pump of Borochi has a nameplate on the side, which contains important parameter information related to the product. Do not tear or damage it, and ensure that the unit identification is always clear and readable.

BEHR0080NNSP01

Borochi DC Inverter Monoblock Wärmepumpe

Typ	BEHR0080NNSP01
Nennspannung	220 - 240V~, 50Hz
Heizleistung*/W	8000
Elektr. Leistungsaufnahme*/W	1550
Heizleistung**/W	7800
Elektr. Leistungsaufnahme**/W	2490
Kühlleistung***/W	6600
Elektr. Leistungsaufnahme***/W	2100
Kühlleistung****/W	6700
Elektr. Leistungsaufnahme****/W	1450
Kältemittel/Gewicht/kg	R290 /0.89kg
GWP	3
ODP	0
Max. Wasserdruck/bar	7
Nennwasserdruck/bar	3
Nennwasserdurchfluss/m3/h	1.35
Betriebsdruck ND Kältekreis/bar	0.5
Betriebsdruck HD Kältekreis/bar	32
Wasserbeständigkeit	IPX4
Nettogewicht/kg	120
Geräteabmessungen/mm	1100*400*1025
Rohranschlussgröße	DN25/DN25
*Außentemperatur: DB7°C/WB6°C RL/VL: 30/35°C	
**Außentemperatur: DB7°C/WB6°C RL/VL: 50/55°C	
***Außentemperatur: 35°C VL: 7°C	
****Außentemperatur: 35°C VL: 18°C	
Shunhong Umwelttechnik (Suzhou) Co., Ltd. Tongjiang Road 305, Bixi, Changshu, Jiangsu, V.R.China	

BEHR0100NNSP01

Borochi DC Inverter Monoblock Wärmepumpe

Typ	BEHR0100NNSP01
Nennspannung	220 - 240V~, 50Hz
Heizleistung*/W	10000
Elektr. Leistungsaufnahme*/W	2060
Heizleistung**/W	9300
Elektr. Leistungsaufnahme**/W	2950
Kühlleistung***/W	7400
Elektr. Leistungsaufnahme***/W	2500
Kühlleistung****/W	8500
Elektr. Leistungsaufnahme****/W	1900
Kältemittel/Gewicht/kg	R290 /0.89kg
GWP	3
ODP	0
Max. Wasserdruck/bar	7
Nennwasserdruck/bar	3
Nennwasserdurchfluss/m3/h	1.7
Betriebsdruck ND Kältekreis/bar	0.5
Betriebsdruck HD Kältekreis/bar	32
Wasserbeständigkeit	IPX4
Nettogewicht/kg	120
Geräteabmessungen/mm	1100*400*1025
Rohranschlussgröße	DN25/DN25
*Außentemperatur: DB7°C/WB6°C RL/VL: 30/35°C	
**Außentemperatur: DB7°C/WB6°C RL/VL: 50/55°C	
***Außentemperatur: 35°C VL: 7°C	
****Außentemperatur: 35°C VL: 18°C	
Shunhong Umwelttechnik (Suzhou) Co., Ltd. Tongjiang Road 305, Bixi, Changshu, Jiangsu, V.R.China	

2.4 Appearance Description

Component introduction

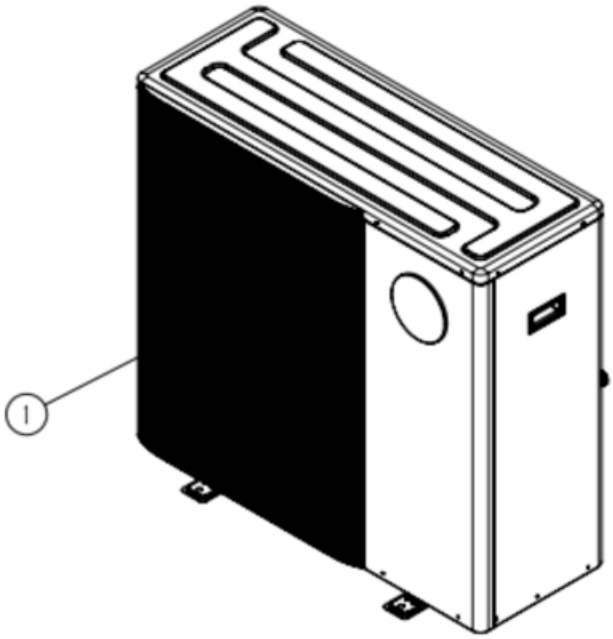

1	Air outlet grille

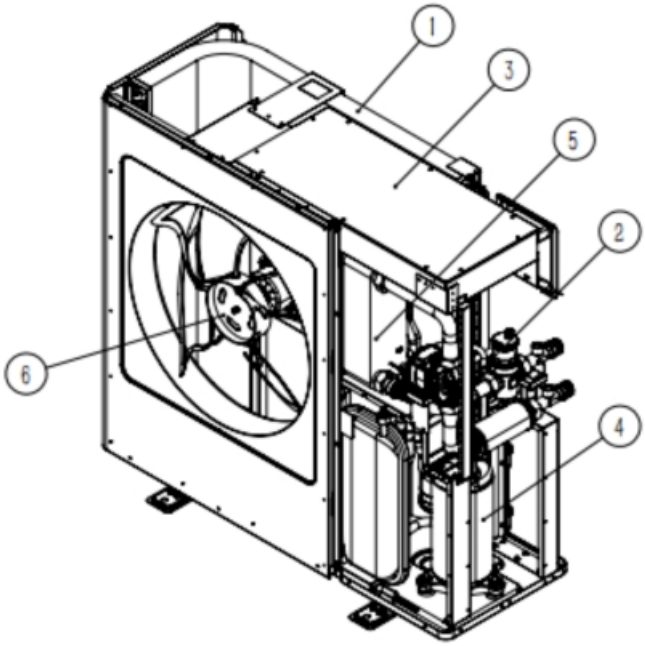

1	Evaporator

2	R290 leakage sensor
3	Electric control box
4	Compressor
5	Plate heat exchanger
6	Fan

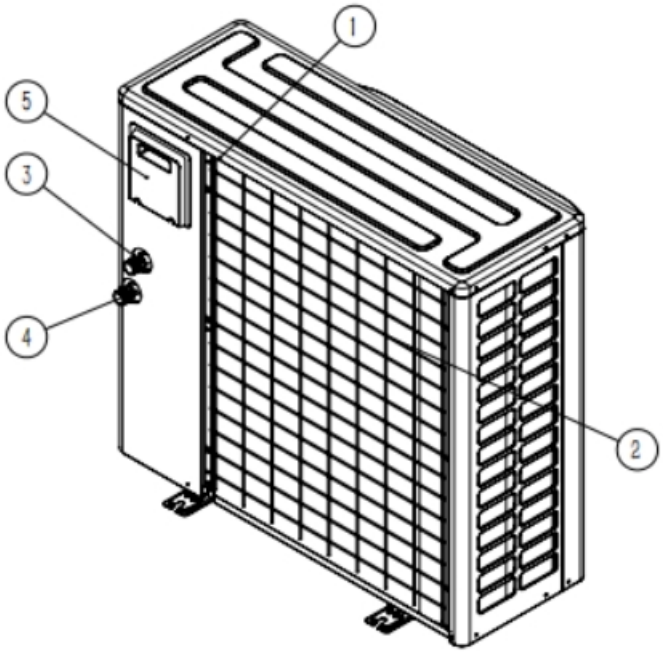

1	Ambient temperature sensor
2	Air inlet grille
3	Water inlet, G1
4	Water outlet, G1
5	Power junction box

Dimensions

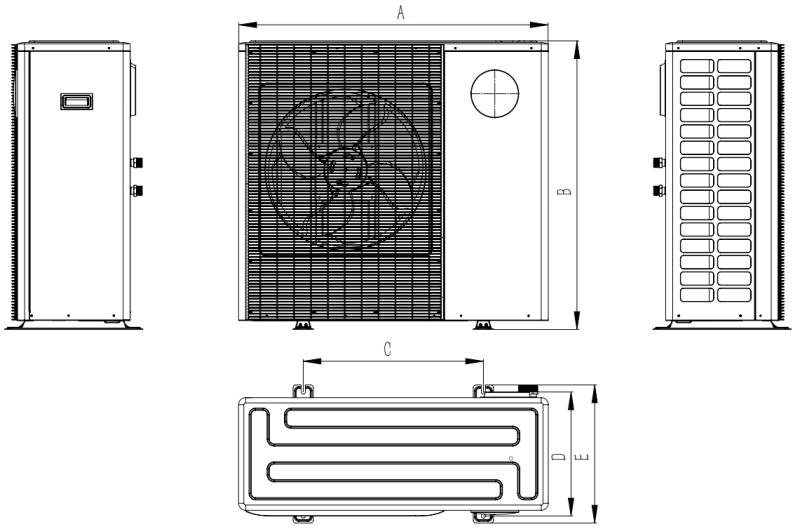

Model	A	B	C	D	E
BEHR0080NNSP01	1100	1025	640	440	490
BEHR0100NNSP01					

Product Bottom View

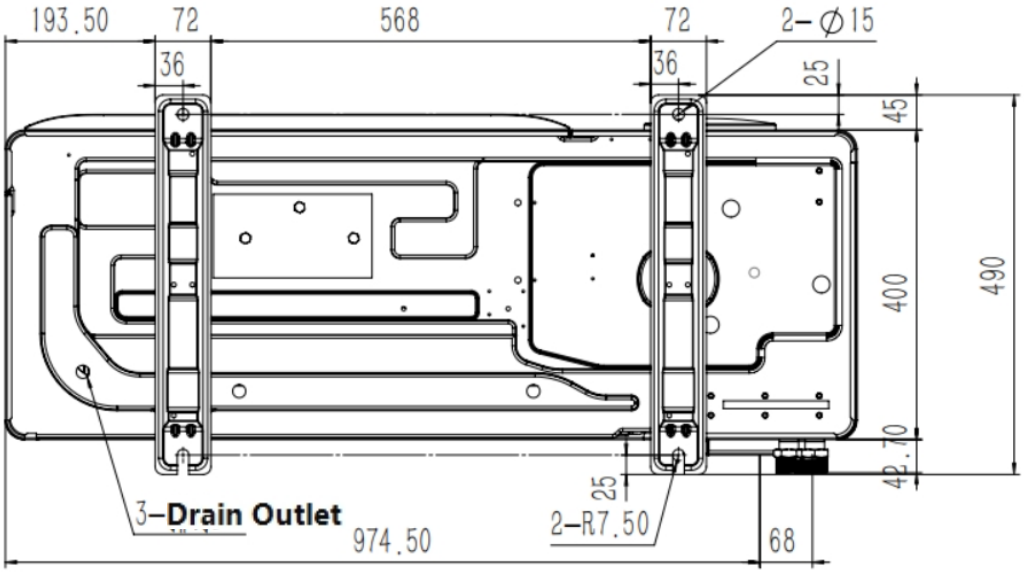

Pipeline system

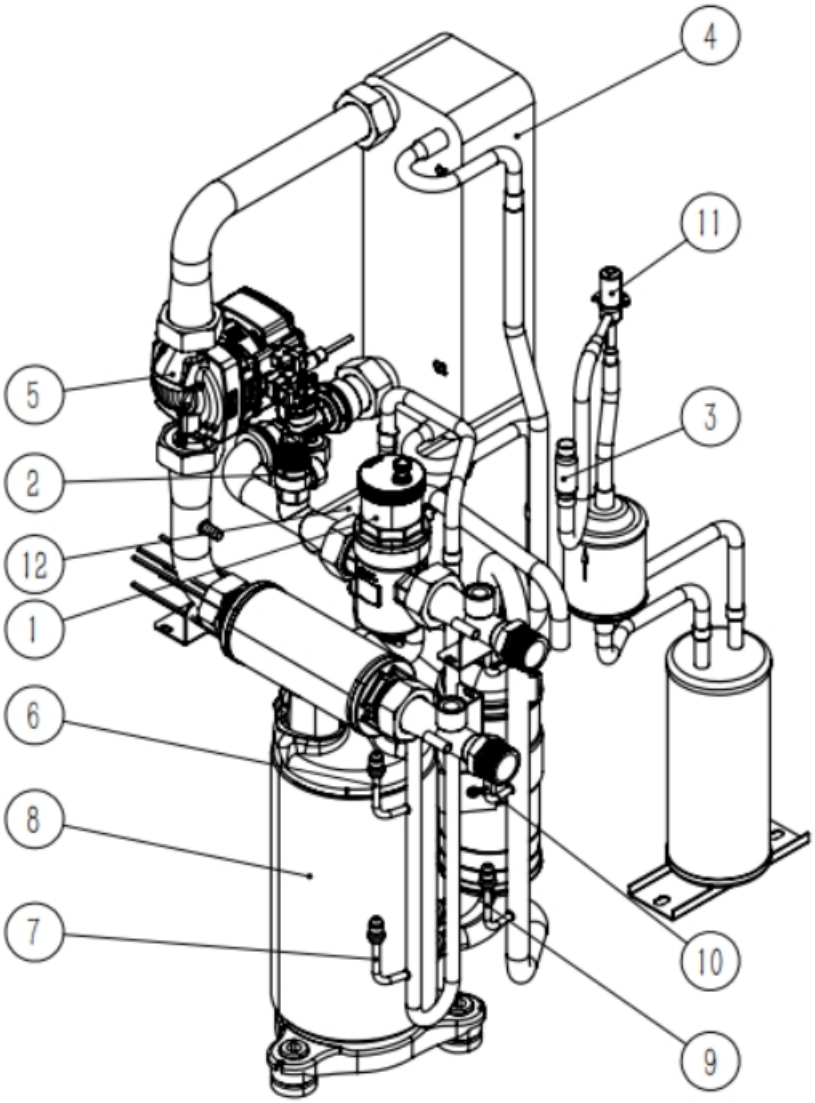

1	Microbubble exhaust valve		2	Waterway pressure safety valve
3	Copper filter		4	Condensate plate heat exchanger
5	Built-in circulating water pump		6	Fluorine circuit high pressure switch
7	Fluorine circuit high pressure sensor		8	Compressor
9	Fluorine circuit low pressure sensor		10	Fluorine circuit low pressure switch
11	Electronic expansion valve		12	Four-way reversing valve

2.6 Working Principle

Integrated heat pump system

The air source heat pump system of Borochi adopts a typical integrated design. It mainly consists of the following modules.

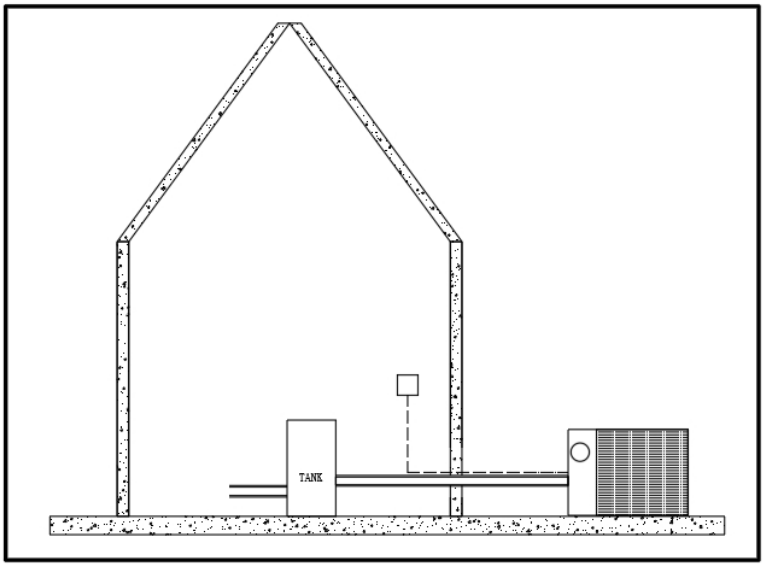

Module	Function description
Outdoor unit	As an important part of the heat pump system, it is a key device for heat exchange and energy conversion. It is responsible for obtaining or releasing heat from the outdoor environment. Its performance and operating status directly affect the efficiency and effect of the entire heat pump system.
EBUS cable	It is used to realize the data transmission and communication functions between the outdoor unit and other system components, ensure that each component can work together, and realize intelligent control and efficient operation of the system, such as transmitting temperature, pressure, operating status and other information so that the system can be adjusted and optimized according to actual conditions.
Wired controller	It is mainly responsible for controlling various functions of the indoor unit, including temperature adjustment, wind speed control and mode switching, so that users can easily operate the indoor unit according to their own needs, and that the indoor unit can work in conjunction with the outdoor unit and other components to achieve overall operation control of the entire heat pump system.
Heat-carrying circulation pipeline	The pipeline is a channel for heat transfer and circulation. Through the heating circuit, it transfers the heat obtained or generated by the outdoor unit to the room to achieve indoor heating or hot water supply. Its design and performance have an important impact on the heating efficiency and stability of the system.

Heating/cooling principle of heat pump

Based on the reverse Carnot cycle, the unit uses the refrigerant circuit inside the unit to complete heat transfer. When the unit is heating, the low-temperature and low-pressure liquid refrigerant in the finned evaporator exchanges heat with the outdoor air. By absorbing heat from the air, the liquid refrigerant evaporates into a gaseous refrigerant, which is then sucked in by the compressor and compressed into a high-temperature and high-pressure gaseous refrigerant. It enters the condenser and exchanges heat with the indoor heat carrier side fluid. Then the heat-carrying side fluid is heated, and the high-temperature and high-pressure gaseous refrigerant is condensed into a low-temperature and high-pressure liquid refrigerant, which then expands through the air flow control valve to become a low-temperature and low-pressure liquid refrigerant and enters the finned evaporator. This is a heating cycle. (Note: The refrigeration cycle is realized by switching the four-way reversing valve, and the principle is similar.)

Heating system process

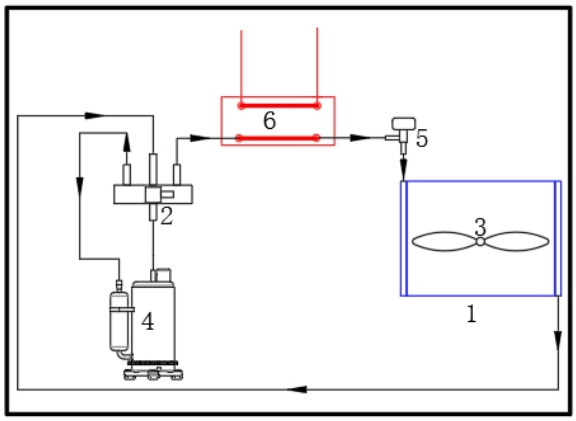

1	Evaporator		2	Four-way reversing valve
3	Fan		4	Compressor
5	Air flow control valve		6	Condenser

Refrigeration system process

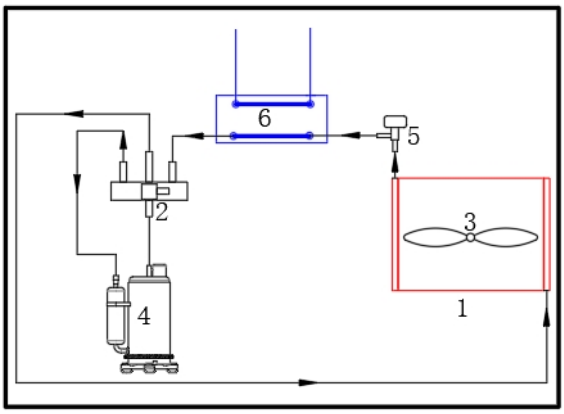

1	Condenser		2	Four-way reversing valve

3	Fan		4	Compressor
5	Air flow control valve		6	Evaporator

2.7 Operating Mode

Cooling/heating mode

Depending on the country/region, the product may have a single cooling mode, a single heating mode, or both cooling and heating modes. This model has both cooling and heating modes. The modes can be selected through the indoor control panel.

Cooling/heating temperature range limit

This product has a minimum ambient temperature and maximum outlet water temperature limit in heating mode, and a maximum ambient temperature and minimum outlet water temperature limit in cooling mode. When the product is running:
1. If it is detected that the current external ambient temperature is lower than the lower limit of heating mode operation or exceeds the upper limit of cooling mode operation, the unit will stop running for protection;
2. If it is detected that the current outlet water temperature is lower than the lower limit of refrigeration outlet water temperature or exceeds the upper limit of heating outlet water temperature, the unit will stop running for protection.

Temperature range in heating mode (heating)

In the heating mode (heating), this product can work at an outdoor temperature of -27°C to 35°C, and the recommended outlet water temperature range is 24~55°C.

Temperature range in heating mode (domestic hot water supply)

In the heating mode (domestic hot water supply), this product can work at an outdoor temperature of -20°C to 35°C, and the recommended outlet water temperature range is 55~75°C.

Temperature range in cooling mode

In cooling mode, this product can work at an outdoor temperature of 15~45°C, and the recommended outlet water temperature range is 7~18°C.

Noise reduction mode

The product has a noise reduction mode. In this mode, the product runs quieter than in normal operation mode to meet user requirements. The noise reduction mode is achieved by limiting the speed of the compressor and fan. (Note: In noise reduction mode, the cooling/heating capacity of the unit will decrease.) The noise reduction mode can be selected through the indoor wired controller or mobile phone app.

Defrosting mode

When the unit is in heating mode, the outdoor coil works as an evaporator. If the outdoor temperature is too low, frost may form on the coil, and the working efficiency of the unit will be reduced. In this case, the unit should be switched from the heating mode temporarily switched to cooling mode for defrosting, and then switched back to the heating mode so that the unit can work in high efficiency.

2.8 Safety Protection

1. High condensing pressure alarm: When it is detected that the operating condensing pressure is higher than the upper limit of the condensing pressure, the unit will give an alarm and stop running. After the condensing pressure drops to a safe range, the alarm will be automatically eliminated. The unit will restart 3 minutes later. If the high condensing pressure alarm occurs repeatedly for three times, the alarm prompt

cannot be automatically eliminated and should be eliminated manually.
2. Low evaporation pressure alarm: When it is detected that the operating evaporation pressure is lower than the lower limit of the evaporation pressure, the unit will give an alarm and stop running. After the evaporation pressure increases to a safe range, the alarm will be automatically eliminated and the unit will restart 3 minutes later. If the low evaporation pressure alarm occurs repeatedly for three times, the alarm prompt cannot be automatically eliminated and should be eliminated manually.
3. Water flow alarm: When it is detected that the water flow is lower than the lower limit set by the flow meter, the unit will stop and give an alarm to prevent running without a heat-carrying medium;
4. Refrigerant leakage alarm: When the R290 sensor detects R290 refrigerant leakage, the whole unit will stop and give an alarm;
5. Anti-freezing protection: When the unit is not running and the ambient temperature is lower than 4°C, the built-in circulating pump of the unit will start automatically to enter the anti-freezing mode.

3 Transportation and Storage

3.1 Transportation Requirements

1. Check the packaging: Before transportation, confirm whether the heat pump equipment packaging is complete and ensure that there is no damage or abnormality. The equipment must be firmly fixed in the package to prevent damage caused by displacement or vibration during transportation.
2. Avoid serious damage: During transportation, if the heat pump is hit violently, falls, or bumps severely, it may suffer from structural damage, leakage of the refrigeration system, and damage to electronic control components.
3. Prohibit violent handling: When transporting equipment, do not pull pipelines, wiring terminals, panel components or fins close to the surface of the equipment.
4. Correct placement angle: During product transportation, the maximum tilt angle of the product shall not exceed 45°. Otherwise, it may cause the breakage of the product circulation pipeline or damage to other components.

3.2 Storage Requirements

	Requirement
Storage Environment	Indoor, clean (dust-free)
Ambient humidity	5%~85%RH (no condensation)
Ambient temperature	-40℃ ~ 50℃
Storage time	It is recommended that the total transportation and storage time should not exceed 6 months

4 Safety Area Setting and Condensate Discharge

DANGER

R290 is a flammable refrigerant. When the leaked refrigerant reaches a certain concentration value, it may cause an explosion when exposed to open flames or electric sparks.

CAUTION

Condensate freezing can cause pipe blockage, affecting the operation of the machine and possibly causing damage to the machine.

4.1 Description of Safety Area

1. This product contains R290 refrigerant, which has a density greater than that of air. In the event of leakage, the escaping refrigerant may accumulate on the ground surface;
2. Do not recycle the leaked refrigerant in any way. Prevent such refrigerant to enter the building;
3. Define a safe area where the equipment is installed. In such area, there shall be no windows, doors, wells, cellar entrances or vents;
4. There shall be no ignition sources such as plugs and sockets, light switches, lamps, electrical switches or other permanent ignition sources in the safe area;
5. The safety area shall not extend to adjacent buildings or public transportation areas.

4.2 Setting of Safety Area for Installation on Floor

Installation on floor

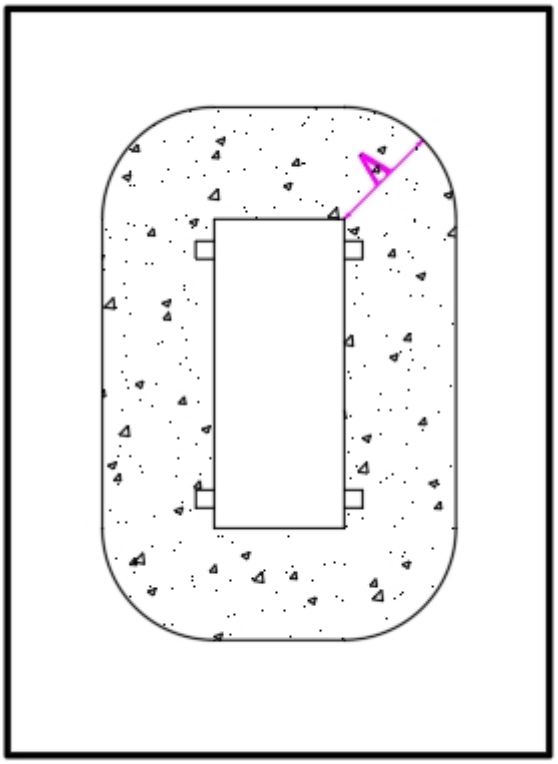

A ≥ 1000 mm			

Installation not on floor

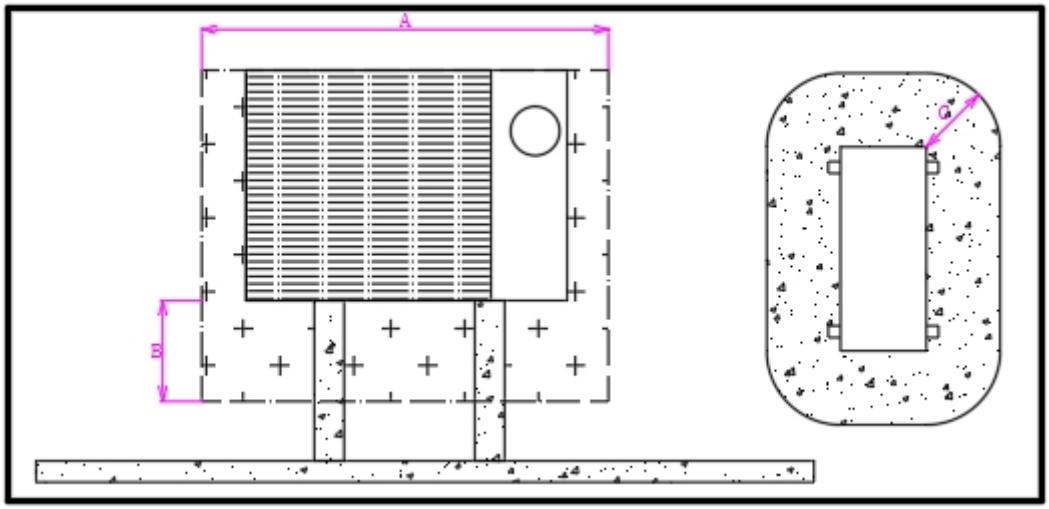

A ≥ 2100mm	B ≥ 1000mm	C ≥ 1000mm	

Installation on floor at the exterior wall of building

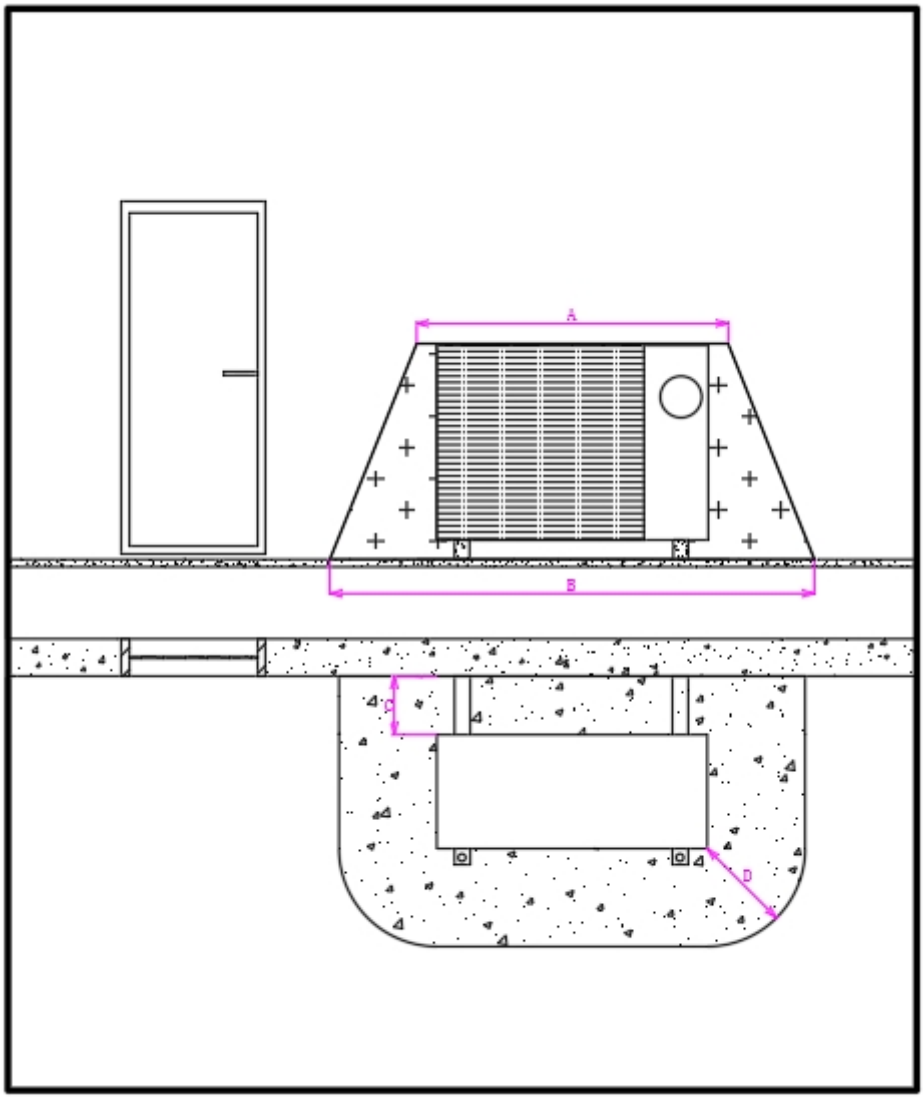

A ≥ 2100mm	B ≥ 3100mm	C ≥ 300mm	D ≥ 1000mm

Installation on floor at corner of building

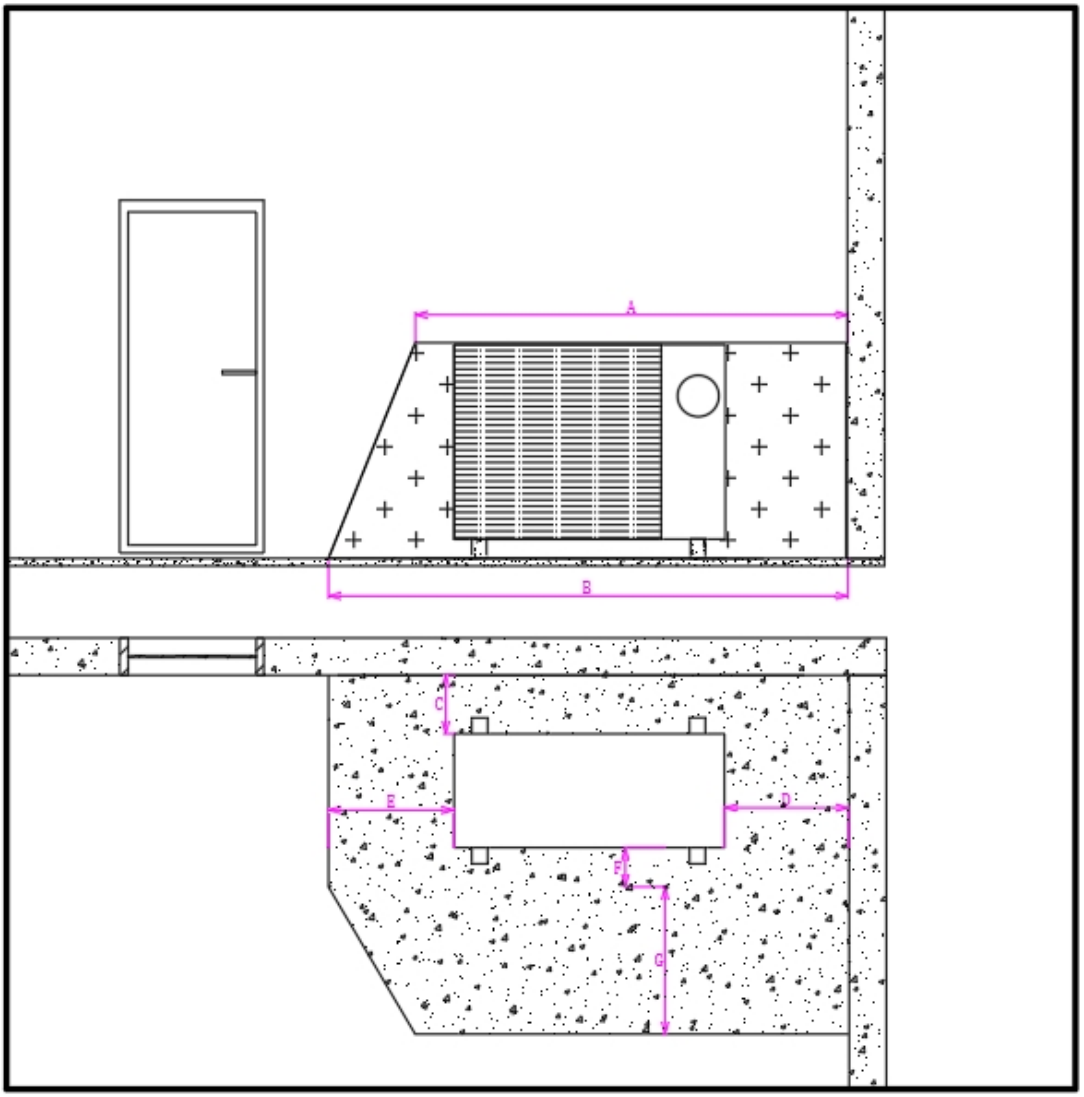

A ≥ 2600mm	B ≥ 3100mm	C ≥ 300mm	D ≥ 800mm
E ≥ 1000mm	F ≥ 500mm	G ≥ 1800mm	

4.3 Setting of Safe Area for Installation on Wall

Installation on wall with small elevation difference

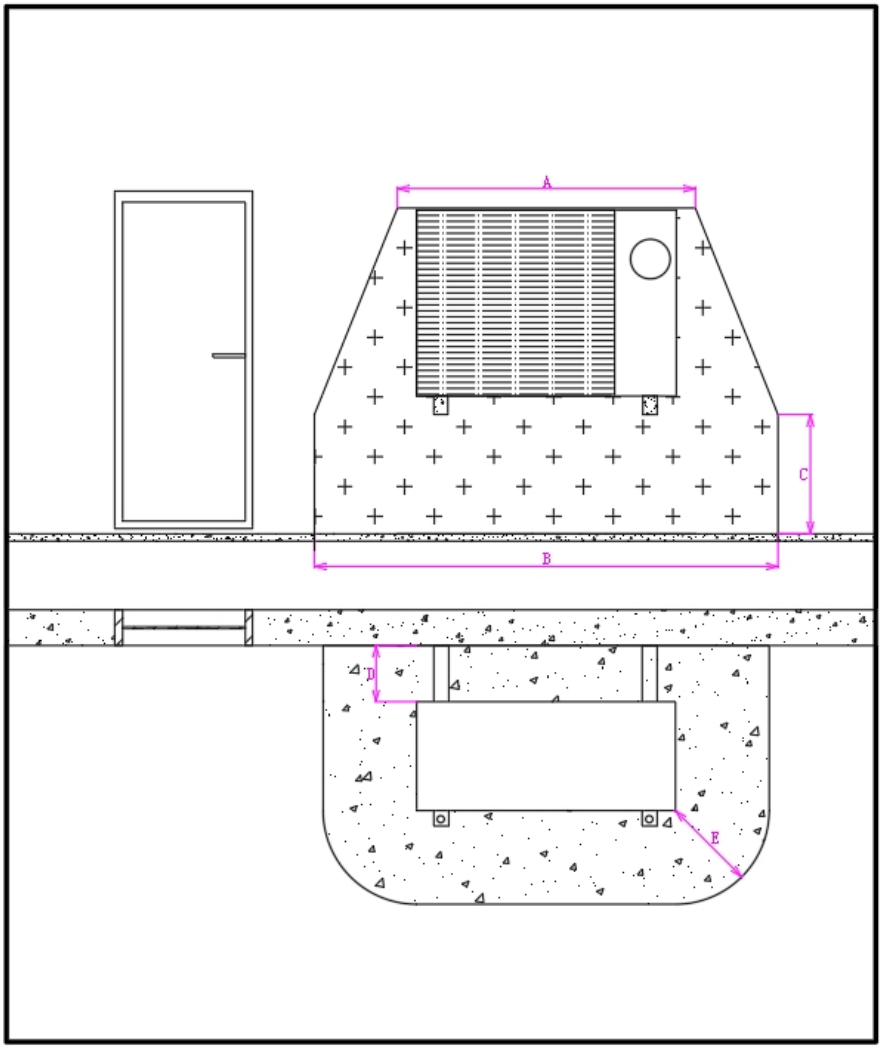

A ≥ 2100mm	B ≥ 3100mm	C ≤ 1000mm	D ≥ 300mm
E ≥ 1000mm			

Installation on wall with large height difference

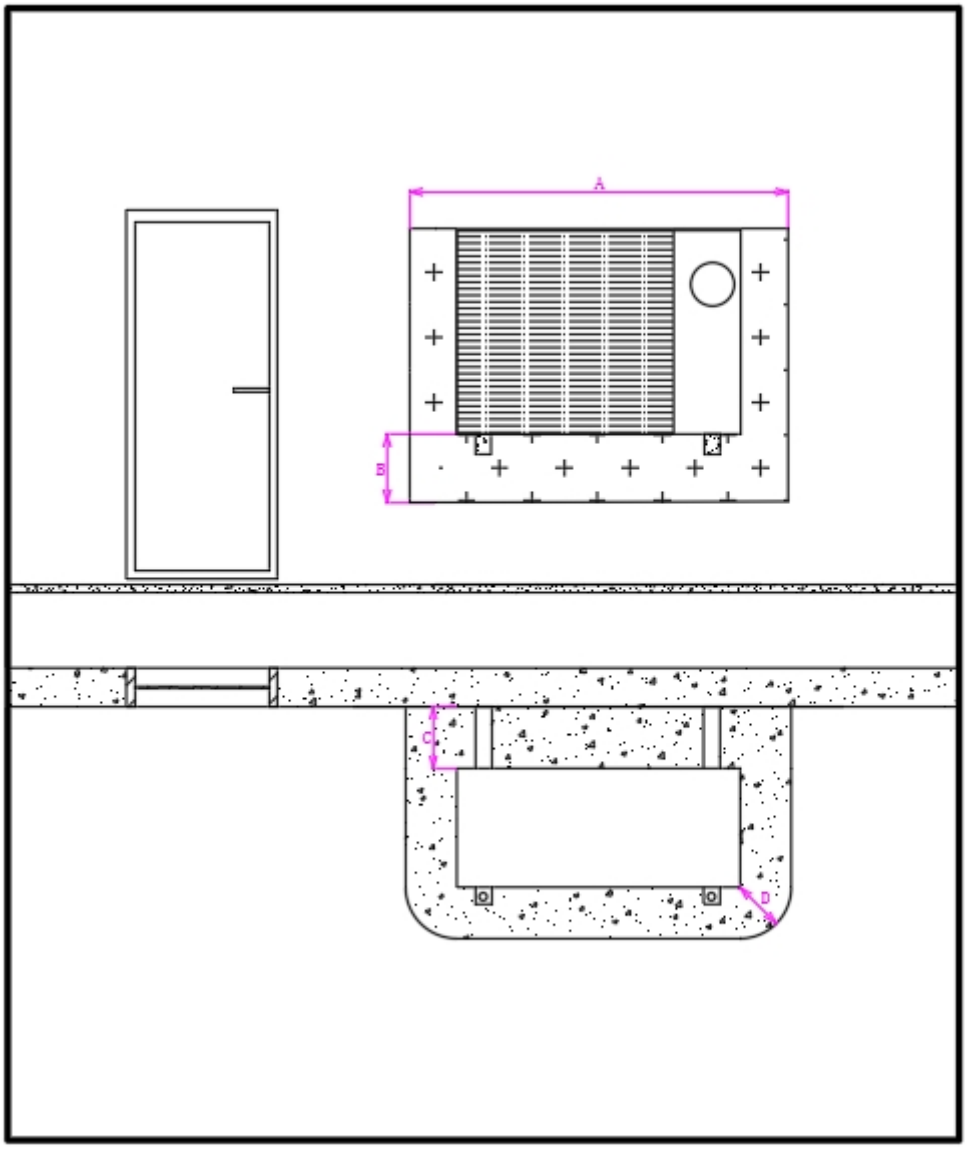

A ≥ 2100mm	B ≥ 1000mm	C ≥ 300mm	D ≥ 500mm

Installation on wall in the left corner of the building with large height difference

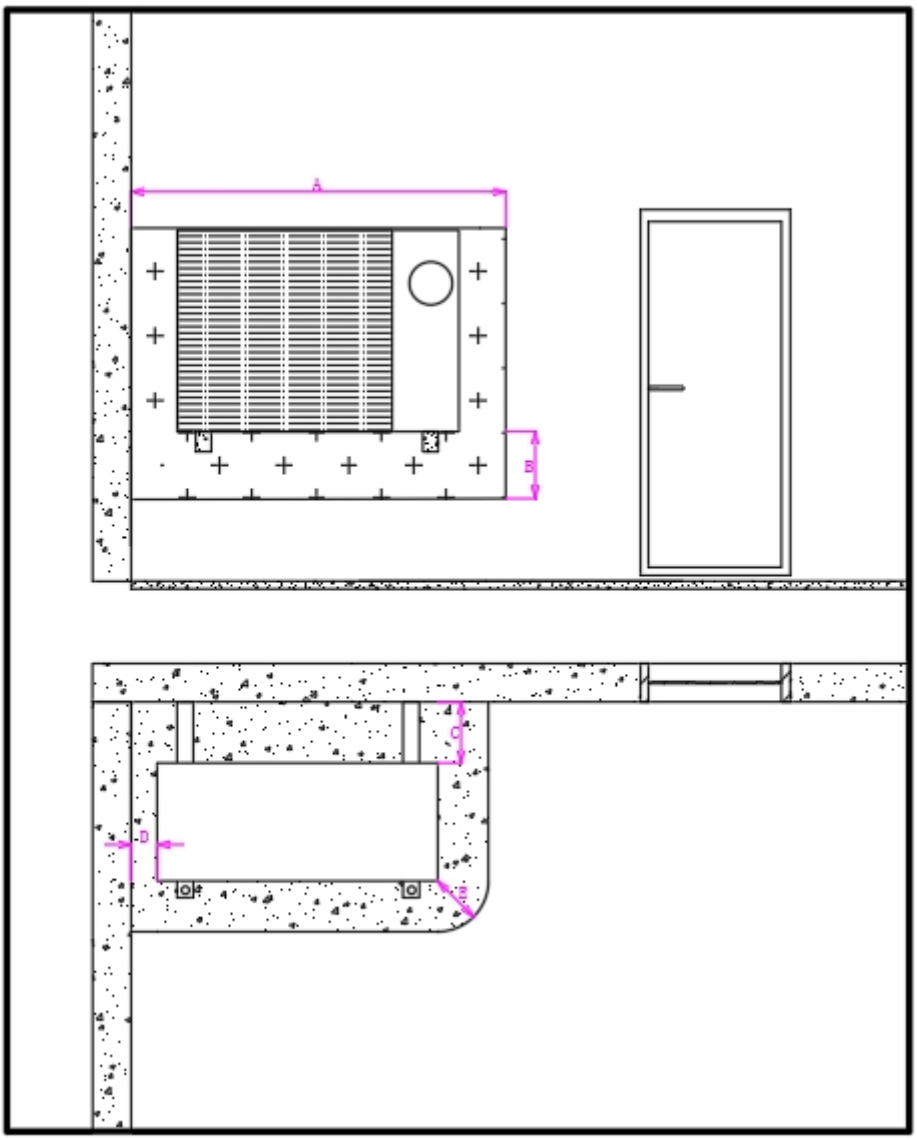

A ≥ 2100mm	B ≥ 1000mm	C ≥ 300mm	D ≥ 250mm
E ≥ 500mm			

Installation on wall in the right corner of the building with large height difference

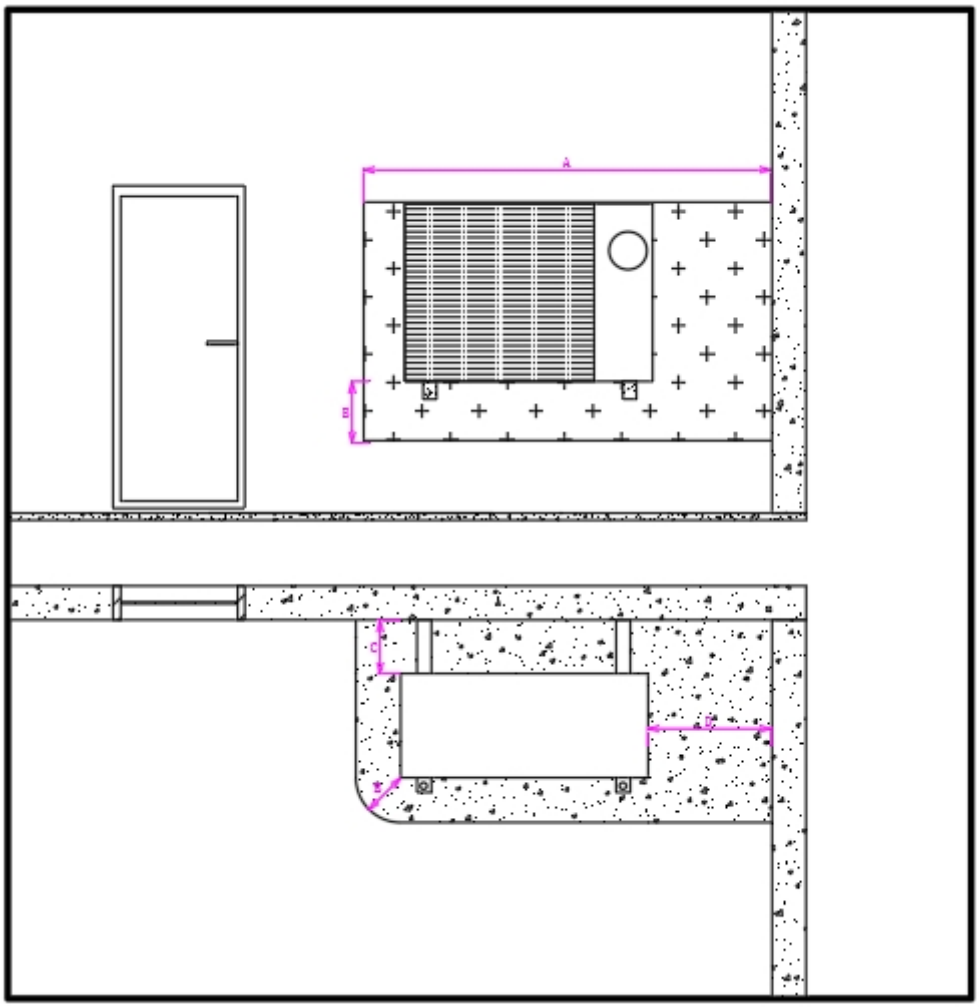

A ≥ 2600mm	B ≥ 1000mm	C ≥ 300mm	D ≥ 800mm
E ≥ 500mm			

4.4 Setting of Safe Area for Installation on Flat Roof

Installation on floor on flat roof

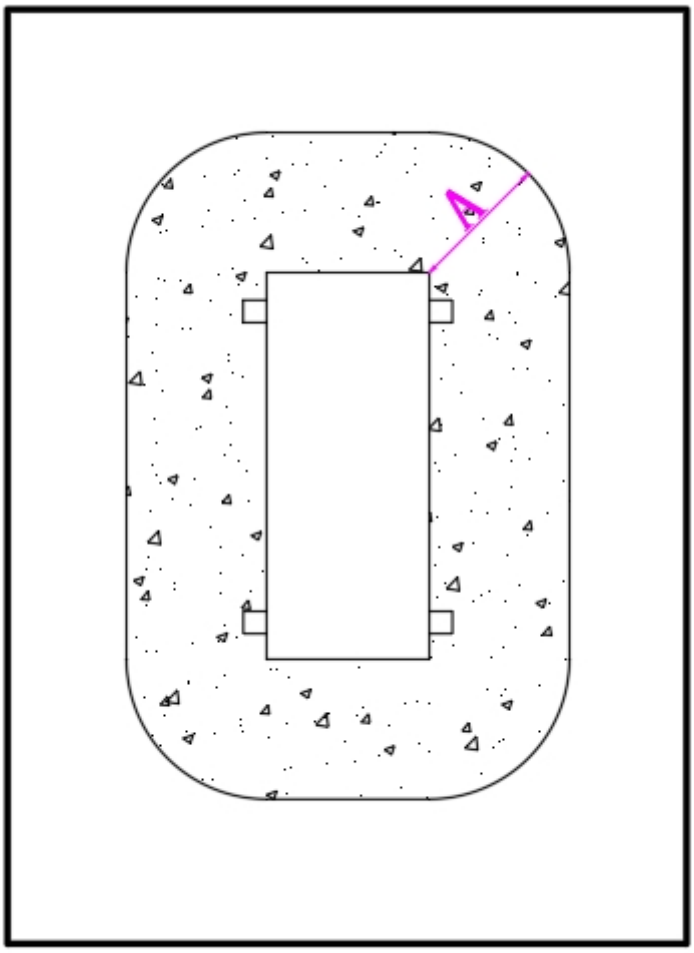

A ≥ 1000 mm			

Installation not on floor on flat roof

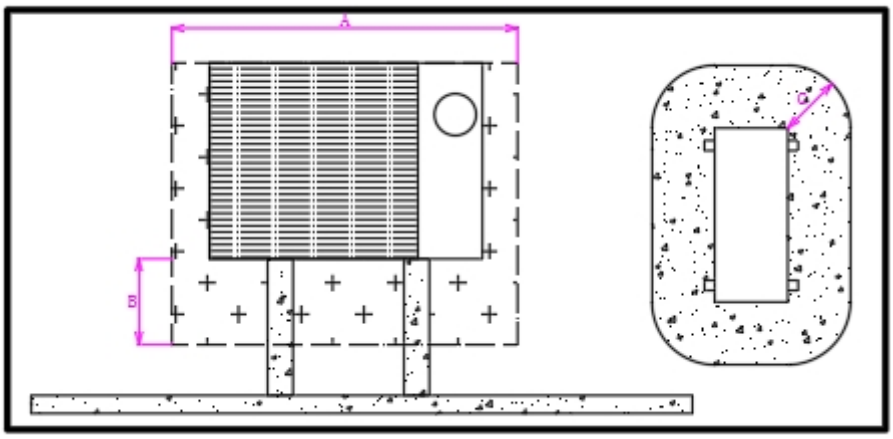

A ≥ 2100 mm	B ≥ 1000 mm	C ≥ 500 mm	

4.5 Instructions for Condensate Discharge

The accumulated condensate can be drained to the sewer, sump or sink through a drain pipe, floor drain, balcony gutter or roof gutter. For all the above installation types, ensure that the accumulated condensed water does not freeze and can be drained in time to prevent ice blockage and damage to the machine.

4.6 Condensate Discharge Design

Installation on floor

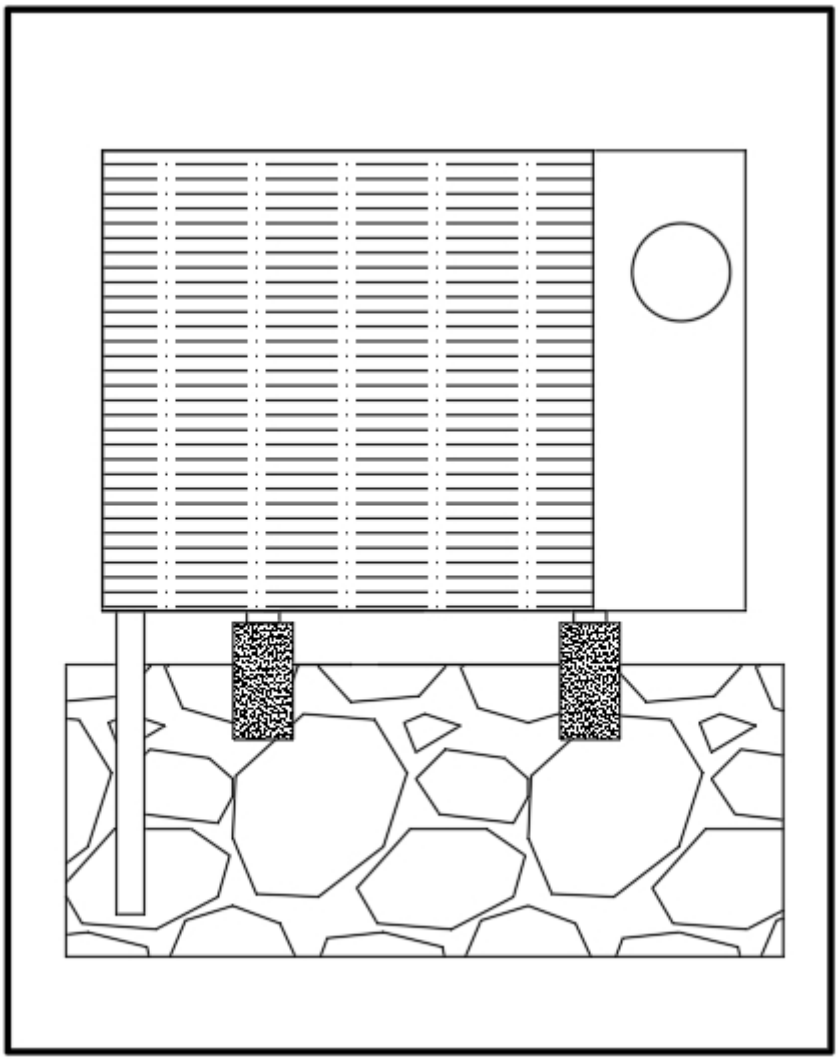

Condensed water can be discharged into the gravel layer on the lower side of the installation area through the water collection pipe. The gravel or sandy loam on the lower side of the installation area can quickly absorb water to ensure that condensed water will not accumulate. In addition, in order to prevent condensed water from freezing in a low temperature environment, it is recommended to wrap an electric heating wire around the outer side of the water collection pipe above ground.

Installation on wall

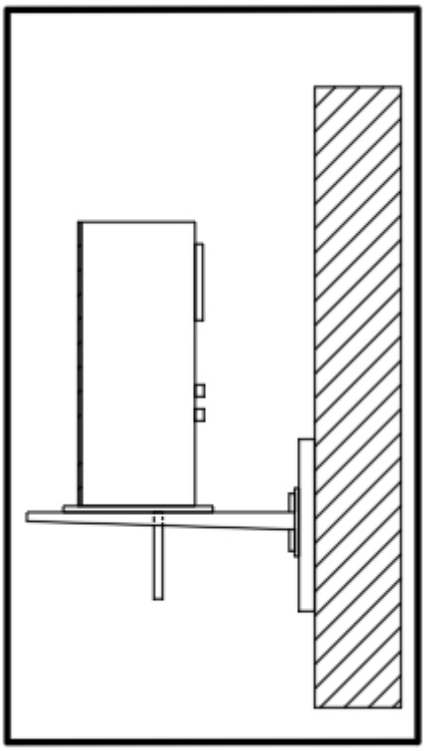

Condensate can be discharged directly into the gravel or sandy loam located below the unit; if the unit drain outlet is connected to a water collection pipe, it is also recommended to wrap an electric heating wire around the outside of the water collection pipe to prevent the water collection pipe from freezing and causing ice blockage in a low temperature environment.

Installation on flat roof

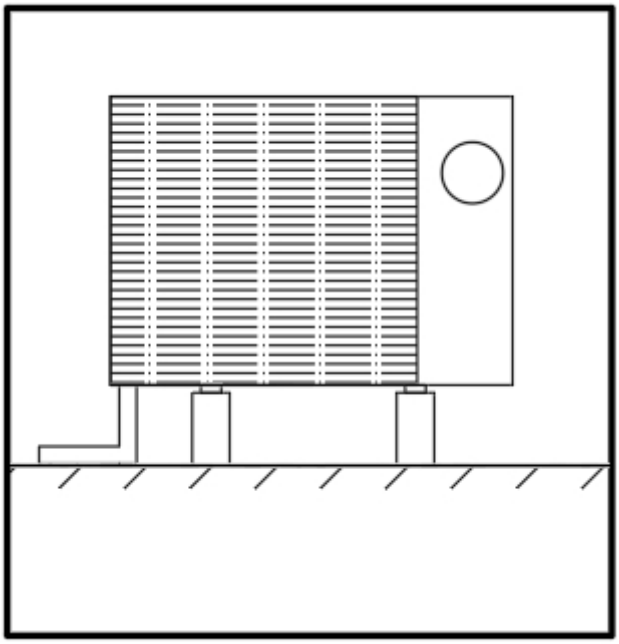

The condensate can be discharged by connecting the water collecting pipe to the downpipe or roof overflow tank. At the same time, it should be noted that under low ambient temperature operating conditions, it is

recommended to wind the electric heating wire around the outside of the water collecting pipe to prevent the water collecting pipe from freezing and causing ice blockage in a low-temperature environment

5 Equipment Installation

5.1 Inspection before Installation

Before installation, an unpacking inspection is required to check whether the unit enclosure has abnormal bumps and damage, and whether the accessories are complete. If there are any problems, please contact after-sales service personnel.

Packing List

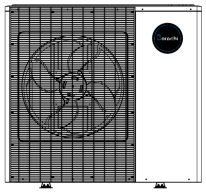		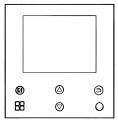	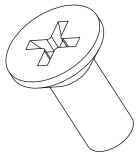
Main unit *1	Quick Installation Manual *1	Wired controller *1	Mounting screw *5
	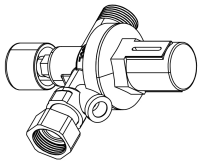	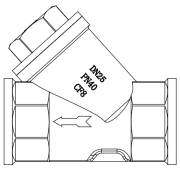	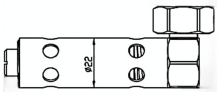
Wired controller connecting wire *1	Water make-up valve *1	Y-strainer *1	Anti-freezing valve *1
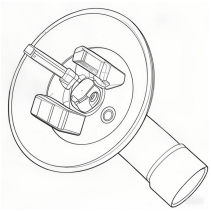	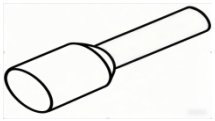		
Base pan drain joint *3	Tubular terminal *28		

5.2 Preparation of Tools and Instruments

No.	Illustration	Name	Purpose
1		Pipe wrench	Tighten or remove the water pipe

2		Wrench	Tighten or remove the water pipe
3		Phillips screwdriver	Tighten or remove screws
4		Wire stripper	Strip cable insulation layer
5	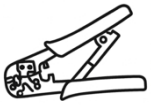	Wire crimping pliers	Crimp cable terminals
6	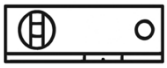	Level	Level the bracket
7		Impact drill	Drill holes on the ground and install brackets
8		Multimeter	Measure electrical parameter and carry out safety inspection
9	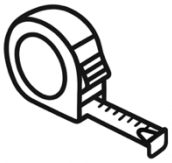	Tape measure	Measure dimensions
10		Labor protection gloves	Protect operators

5.3 Installation Requirements

Installation location

CAUTION

During installation, be sure to keep away from the airspace with high-voltage electricity running through it, and at the same time keep away from possible open flames.
Ensure that the installation location on the wall can be safely reached; if product-related work is carried out at a height of more than 3 meters, professional fall protection devices must be installed according to local laws and regulations.
The product may tip over under wind load, posing a risk of injury. A safe area of 2 meters shall be maintained from the edge of the roof, plus the clearance required for work, and entry into this safe area is strictly prohibited. If the above requirements cannot be met, reliable technical fall protection devices such as railings shall be installed at the edge of the roof, or safety facilities such as scaffolding and safety nets shall be set up.

Installation on floor

To install the equipment on the floor, please do not install it at the corner of the room, between walls or between fences. Install it at the place where there will not be a lot of snow accumulation in winter and the place not affected by strong winds and keep it crosswise with the main wind direction as much as possible. Ensure that the underground soil layer will not accumulate water and its water absorption is good. Choose the installation site with good sound absorption conditions, such as a place surrounded by grass, hedges or fences.

Installation on wall

To install the equipment on the wall, ensure that the bearing capacity of the wall meets the relevant requirements. In particular, pay attention to the weight of the unit mounting bracket and the product itself to ensure that the wall can bear the load safely and avoid safety hazards caused by weight problems. At the same time, avoid choosing a location close to the window to install related equipment to ensure that the noise and vibration generated by the operation of the equipment will not interfere with the interior.

Installation on flat roof

To install the equipment on the floor, the installation point should be the roof of a building with poured concrete structure. Choose an easy-to-reach installation point to facilitate early installation and later maintenance. The installation position should ensure that the air inlet is not affected by strong winds, and the unit should be placed crosswise with the main wind direction as much as possible. The installation point should be kept at a sufficient distance from adjacent buildings to avoid operating noise interfering with the normal work and life of surrounding personnel.

Installation space

To ensure the performance of the unit, please ensure the following minimum installation distance.

Installation on floor or flat roof

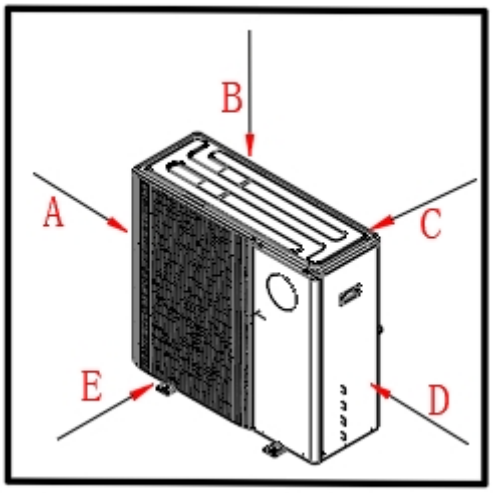

No.	Minimum spacing
A	250 mm
B	1000 mm
C	300 mm
D	800 mm
E	1000 mm

Installation on wall

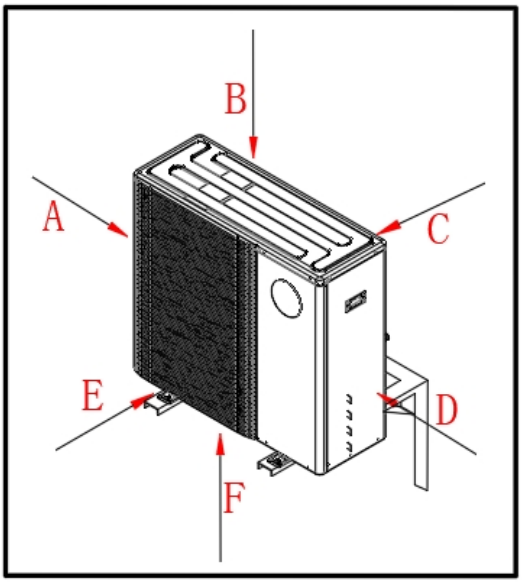

No.	Minimum spacing
A	250 mm
B	1000 mm
C	300 mm
D	800 mm
E	1000 mm
F	300 mm

5.4 Construction of Installation Foundation

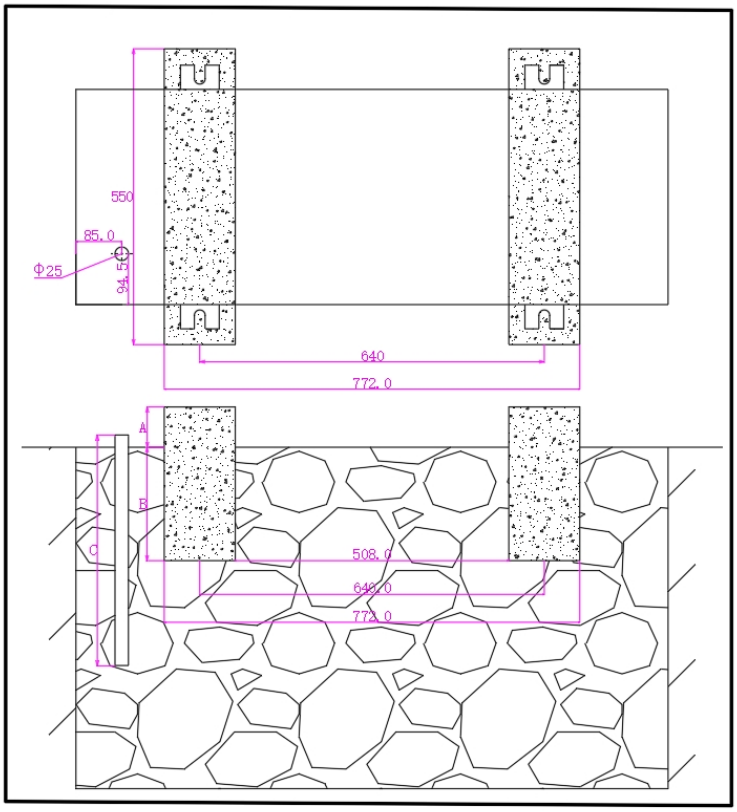

No.	Minimum spacing
A	200 mm
B	300 mm

C	1,000 mm (area with the possibility of icing)
	600 mm (area without the possibility of icing)

5.5 Design of Windbreak Wall

1. If the installation site is not windproof (see the schematic diagram below), set up a windbreak wall;
2. Comply with the minimum spacing requirements to ensure that the setting of the protective wall does not affect the normal operation and maintenance of the equipment.

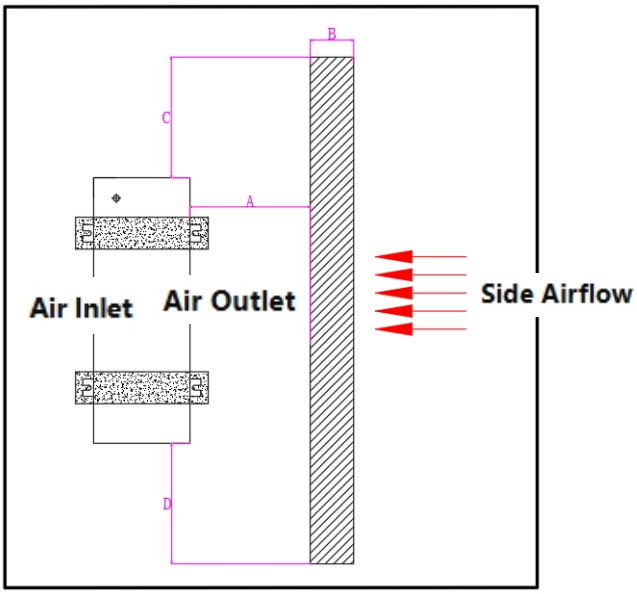

No.	Minimum spacing
A	1000mm
B	Depending on the actual local construction requirements
C	800mm
D	800mm

6 Pipe Installation

6.1 Safety Precautions

CAUTION

The installation of pressure pipelines involves high risk, and safety regulations must be strictly followed to ensure the safety of personnel and equipment:
1. The pressure pipeline must have quality certification documents, and undergo appearance inspection and re-inspection.
2. Pipeline installation workers, non-destructive testing personnel, etc. must have relevant qualifications.
3. Set up warning areas and warning signs for pressure pipeline installation.
4. Avoid forced alignment during installation, use special tools to adjust the deviation; install the support and hanger firmly, and reserve space for thermal displacement.
5. Prepare a pressure test plan, slowly increase the pressure to 1.5 times the design pressure in stages, and do not carry out any repair under pressure; carry out water pressure test if necessary at ambient temperature >5°C.
6. Set up isolation belts in the test area, evacuate non-staff members, and monitor pressure changes in real time.
7. After the test, release pressure in time, drain the accumulated liquid, and dry the pipeline.
8. After mechanical or chemical cleaning acceptance, ensure that there are no leaks and the thickness of the insulation layer meets the standard.

6.2 Installation Type of Pressure Pipeline

The main unit is connected to the primary heat exchange pipeline at the user's end, and the outdoor unit is directly connected to the indoor terminal equipment and heating device. There is a risk of freezing.
The main unit is connected to the secondary heat exchange pipeline at the user's end. There are primary and secondary heating circuits. An intermediate heat exchanger (located in an indoor terminal device or building) is used. The primary circuit is filled with a water/antifreeze mixture to protect the outdoor unit during frost or power outage.

6.3 Minimum Circulating Water Volume

When the unit is running, ensure that there is a constant and sufficient water flow through the heat pump. The minimum circulating water volume of heating water must be guaranteed during design. The minimum circulating water volume is set according to the lower alarm limit threshold of the flow sensor, generally 80% of the rated circulating water volume.

6.4 Requirements for Pressure Pipeline Components

The selected pressure pipeline should meet the physical and chemical requirements of the heat transfer medium under the corresponding working conditions without physical deformation and chemical reactions;
The pipeline should withstand the maximum working pressure and temperature under design conditions;
The pipeline should be ultraviolet resistant and have high temperature resistant insulation layer to ensure the safe and efficient operation of the system.

6.5 Preparation for Pressure Pipeline Installation

Thoroughly flush the heating device to remove pipe residues before connecting the product.
Weld on connectors (if necessary) before the relevant pipes are installed on the product.
Install a filter in the heating return line to prevent impurities from entering the system.

6.6 Laying of Pressure Pipeline

Underfloor installation

To the heating circuit pipeline underfloor, the pipeline, compensation and fixing devices should be reasonably arranged to prevent vibration and deformation and ensure that the pipeline is laid reasonably and safely.

Installation on wall

Pipes are laid to the product through wall pipes with a downward slope of approximately 2° from the inside to the outside (see the dimensions and clearance information in the fitting installation instructions) to ensure smooth drainage without risk of water accumulation.

6.7 System Pipe Connection

The piping interface required for the unit is of G1 internal thread, and the Y-type filter, water supply valve, and low-temperature antifreeze valve are installed in sequence according to the optional accessories chosen by the customer. After all pipe fittings are installed, a pressure test of the water circuit is required to ensure that there is no leakage in the water circuit.

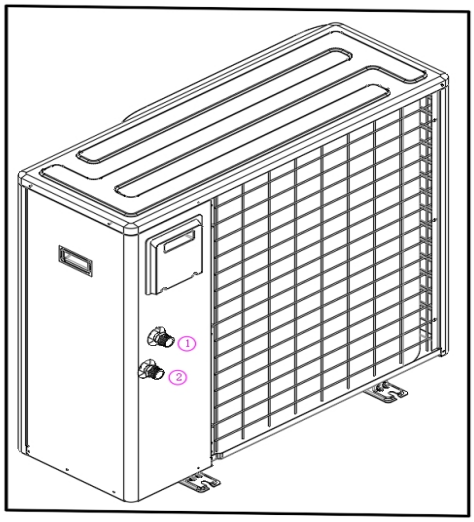

Location	Interface type	Interface size
1	Water inlet	G1 external thread
2	Water outlet	G1 external thread

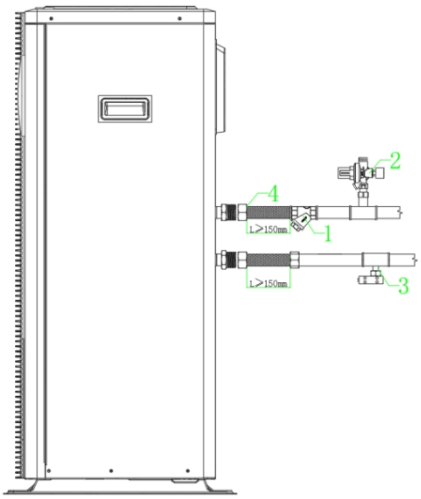

Accessory	Name	Interface size
1	Y-type filter	DN25
2	Automatic make-up valve	DN20
3	Low-temperature antifreeze valve	DN25
4	Connection Hose	DN25

6.8 Pressure Relief and Exhaust Safety Devices

The unit system is internally integrated with safety valves and exhaust valves. When the user end is directly connected to the primary side of the unit, there is no need to add the above components; when there is secondary heat exchange between the user end and the unit, a safety valve and an exhaust valve are added to the secondary heat exchange side according to the on-site installation conditions to ensure the safety and stability of the secondary heat consuming terminal.

6.9 Connection of Product to Swimming Pool (Optional)

The product heating circuit shall not be directly connected to the swimming pool.
Suitable split heat exchangers and other necessary components should be used for installation to ensure that the swimming pool water system is safely isolated from the heat pump system to avoid mutual influence.

7 Electrical Connections

7.1 Safety Precautions

DANGER

Improper electrical connection may lead to electric shock and death, affect product safety and cause damage or injury. Only qualified installation personnel can carry out electrical installation.

7.2 Electrical Installation Requirements

Preparation

1. Satisfy the technical conditions for connecting to the low-voltage network of the energy supply company to ensure a safe and stable connection.
2. Determine whether the energy supply company lockout function is available and how the product power supply is designed (such as single or dual power supply) based on the product situation.
3. Use the product nameplate to determine the rated current, and select the appropriate cable cross-section accordingly to ensure safe and efficient power transmission.
4. Lay wires from the building through the wall pipe to the product. If the line is longer than 10m, separate the power cables and sensor/bus lines to avoid electromagnetic interference.

Supply voltage requirements

Single-phase 230V with a tolerance of +10% to -15% to ensure the normal operation of the product.

Electrical component requirements

1. The flexible sleeve that is suitable for outdoor laying and conform to 60245 IEC 57 (H05RN-F) should be used to lay the power supply line to ensure that the line is safe and durable.
2. The gap between the electrical isolation contacts should be at least 3 mm to ensure the electrical isolation effect.
3. C-type slow-blow fuses should be used to prevent excessive current from damaging the equipment.
4. According to the requirements of the installation site, if necessary, a Type B residual current circuit breaker (with tripping (>1kHz) after a short delay and suitable for inverter) should be used to protect personnel safety.

Wire stripping requirements

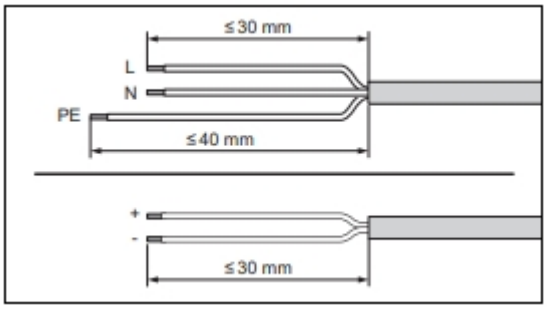

1. To shorten the wire as necessary, strip it in an appropriate way to ensure that the insulation layer of each conductor is not damaged.
2. After stripping, in order to avoid short circuit caused by loose wires, install a sleeve at each stripped end of the conductor to ensure safe electrical connections.

Electrical isolation

Electrical isolation is also referred to as "isolating switch" in this Manual and is usually achieved by using fuses or circuit breakers in the building meter/fuse box.

Function of locking by power company

The heat pump of Borochi conforms to SG-READY standard. After the heat pump is installed, it is necessary to contact the power company to install the control box and complete the wiring on site so that the power company can regulate the heat pump power.

7.3 Power Cord Connection

Removal of junction box

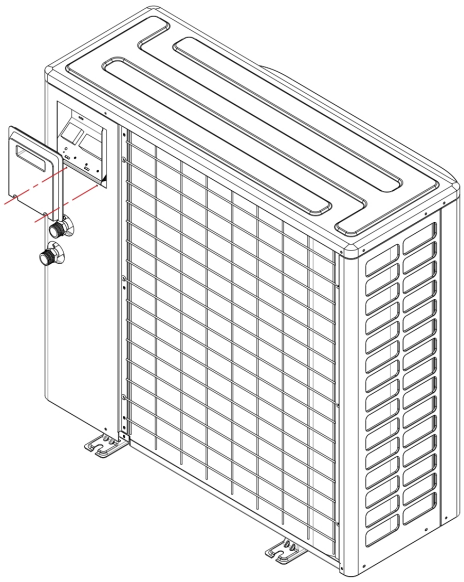

The junction box housing is fixed by 2 black M4*10 large pan head screws, which can be removed with a screwdriver.

Electrical terminal block

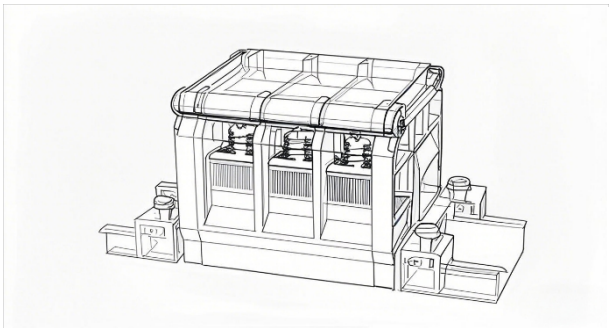

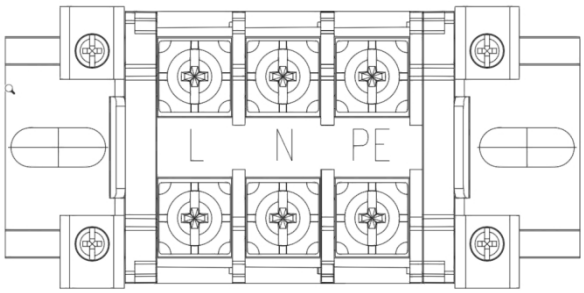

Wiring requirements

1. Use M5 screws for crimping
2. Use an O-type terminal of R5.5-5 or a Y-type terminal of Y5.5-5 for the inner diameter of the hole.
3. Use AWG10 wire for external power cords.
4. Connect the corresponding live wire, neutral wire and ground wire according to the instructions on the terminal block.
5. Install the junction box after all wiring harnesses are connected.

Electrical wiring terminal block

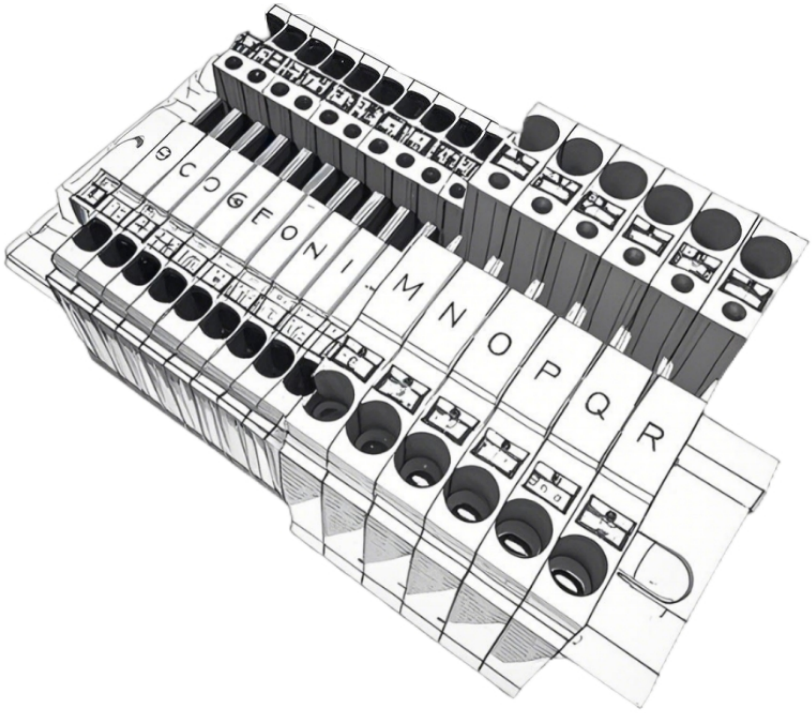

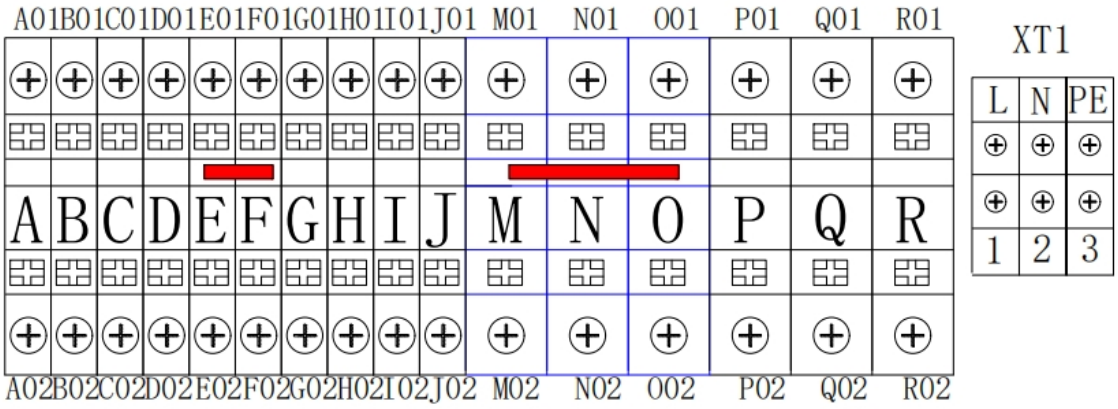

Location	Definition	Description
A02, B02	485_A: A02 485_B: B02	RS485 communication interface of the main unit
C02, F02	DHW tank NTC temperature sensor port	Sensor: NTC 10 kΩ ±1%, Beta 3435
D02, E02	External pump PWM input: D02 GND: E02	Externer External PWM pump control signal input. Used for PWM-controlled pumps. If an AC pump is used, this interface is not required.
F01, E02, F02	Control signal GND	

I02, J02, H02,G02	RS485_B: I02 RS485_A: J02 12V DC: +: H02 −: G02	Wired controller interface
M02, N02, O02	AC POWER_N	Neutral terminal of the 230 V power supply
R02	AC POWER_L: Three-way valve	Live terminal for 230 V power supply of the three-way valve
Q02	AC POWER_L: External pump	Live terminal for 230 V power supply of the external pump
P02	AC POWER_L: Anti-freeze valve	Live terminal for 230 V power supply of the anti-freeze valve

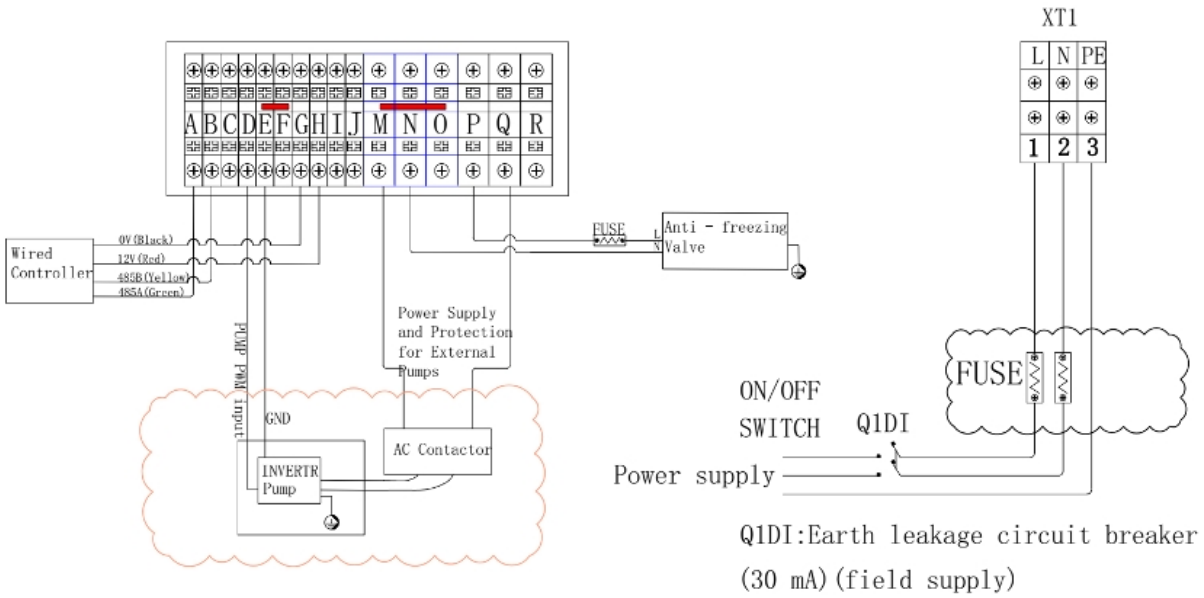

Wiring requirements

1. Wiring shall be carried out according to the corresponding functions in the above table
2. Terminals A~J are connected to rigid wires (cross-section AWG26~18), and the external wiring harness is equipped with cold-pressed tubular terminals of corresponding wire diameters (yellow or white terminals in the accessory bag can be used);
3. Terminals M~R are connected to rigid wires (cross-section AWG20~12), and the external wiring harness is equipped with cold-pressed tubular terminals of corresponding wire diameters (red terminals in the accessory bag can be used).

Wiring requirements for external equipment

1. If the load current is less than 0.2 A, the load can be connected directly to the terminal.
2. If the load current is greater than or equal to 0.2 A, an AC contactor must be installed between the terminal and the load.
3. It is recommended that the maximum power of the external water pump does not exceed 200 W.
4. For external pumps, both fixed-speed pumps and variable-speed pumps can be connected directly to the power supply. If speed control of a PWM-controlled variable-speed pump is required, connect the control cable according to the wiring diagram shown.

- **Preparation of terminal wire**

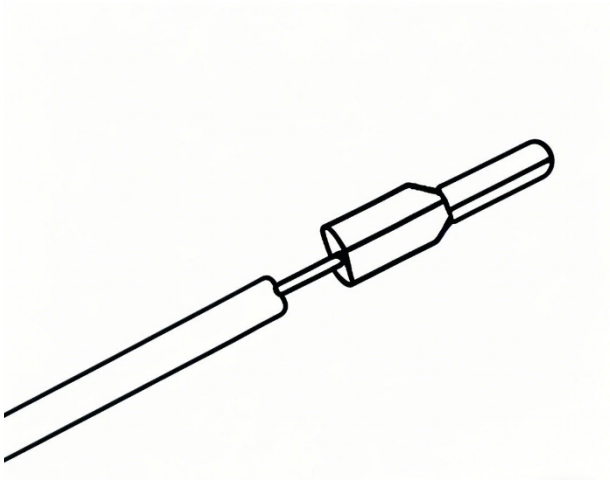

1. Insert the wire with sheath (about 5mm) stripped into the cold-pressed terminal.

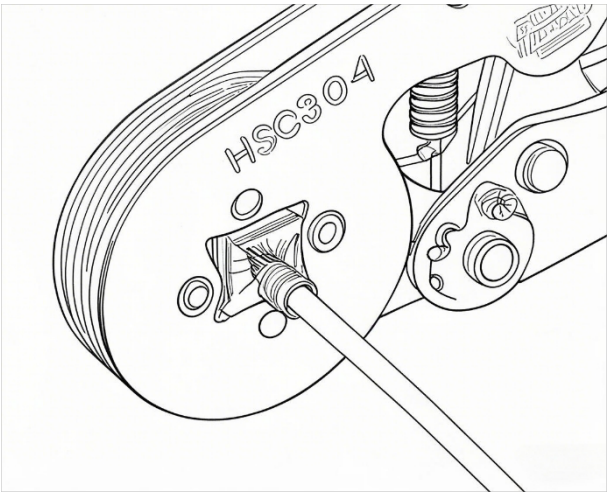

2. Fix the insulated terminal in the crimping pliers.

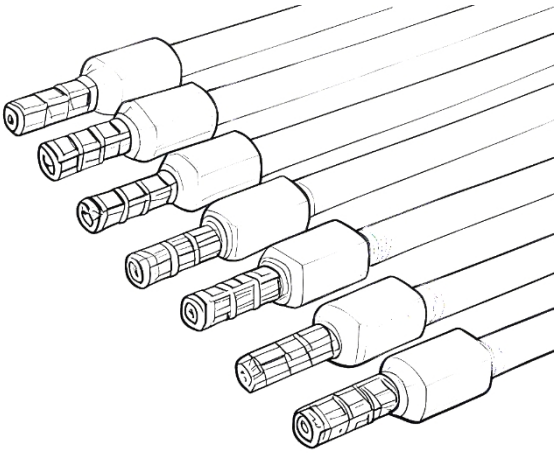

3. Complete crimping.

Installation of wired controller

The wired controller is an indoor control terminal dedicated to control the heat pump system. It adopts a touch button design. It features easy operation and user-friendly interface. The wired controller is used for mode switching, temperature setting and timing control of heat pumps, view of system operation status in real time, improving the convenience of use and energy efficiency management level.

Installation environment

1. In an industrial-level design, the wired controller is suitable for indoor environment. It can operate stably in the temperature range of 0°C to 50°C. It is not recommended to install the equipment outdoors or in other special environmental conditions.
2. The wired controller has passed the CE electrical safety certification and has basic electromagnetic immunity, but it does not mean that it can be completely free from electrical noise interference under any circumstances.
3. Do not install the wired controller in an environment with strong mechanical vibration to avoid affecting normal operation.

Installation location

1. The recommended installation height is 1.2~1.5m for easy viewing and operation.
2. Do not install the wired controller in bathrooms or areas with high humidity.
3. During installation, ensure that the back of the wired controller is adequately spaced from other electrical components (such as AC contactors, starters and relays).
4. Keep the wired controller in particular away from equipment that generates high-frequency interference such as inverters and power supplies.
5. Keep all communication cables away from high-voltage cables to avoid communication failures caused by interference.

Wiring requirements

1. The wired controller only supports DC power supply and its rated input voltage is 12VDC ±20%.
2. The length of the power cord should be shortened as much as possible. It is recommended that the shielded wire should not exceed 500m, and the ordinary twisted pair cable should not exceed 300m.
3. It is recommended to use twisted pair shielded wire as the power supply cable.
4. The product enclosure must be reliably grounded.

Please complete the wiring of wired controller according to the following schematic diagram.

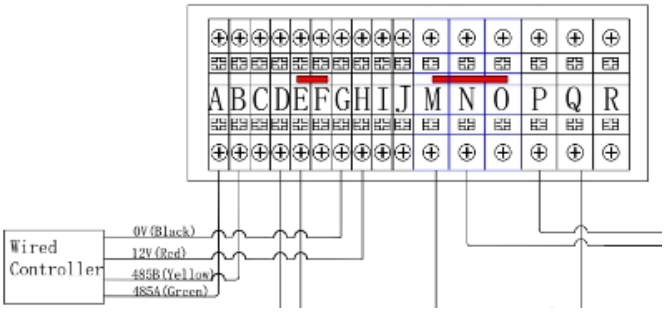

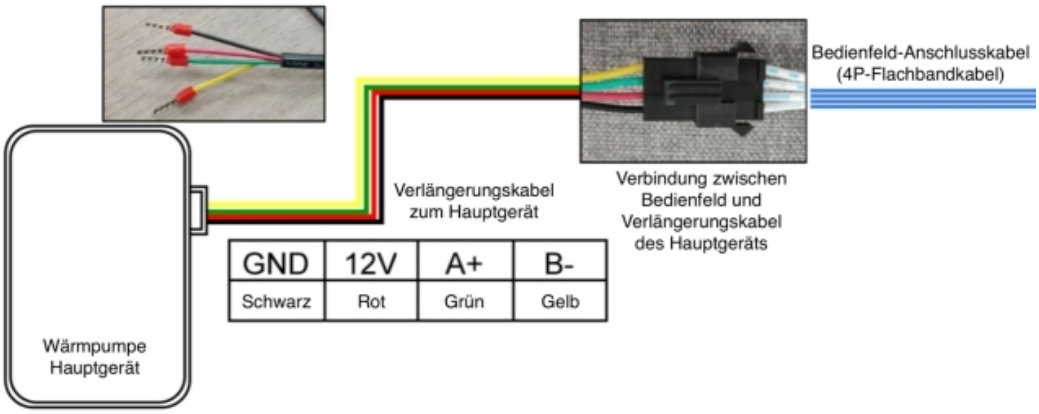

1. If the communication cable needs to be extended, the total cable length must not exceed 150 m.
2. For longer cable runs or when the cable is installed in environments with electrical interference, a shielded cable must be used.
3. When routing the cables, ensure that communication cables are not installed together with AC power cables or placed close to sources of electrical interference. The connectors at the communication ports must be securely and reliably connected.

Installation of junction box

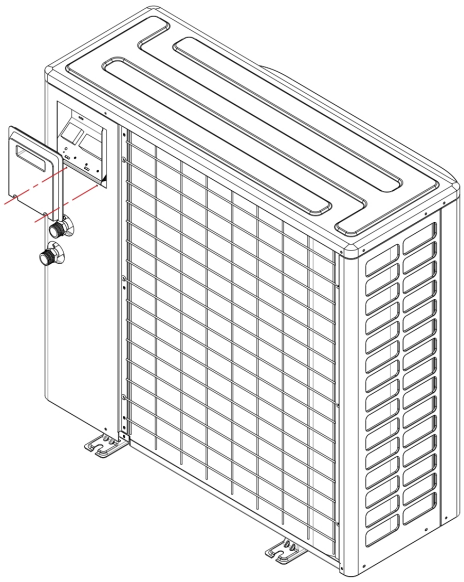

After the wiring, fix the junction box with 2 black large pan head M4*10 screws.

7.4 Wiring of Electric Control Box

Removal of electric control box

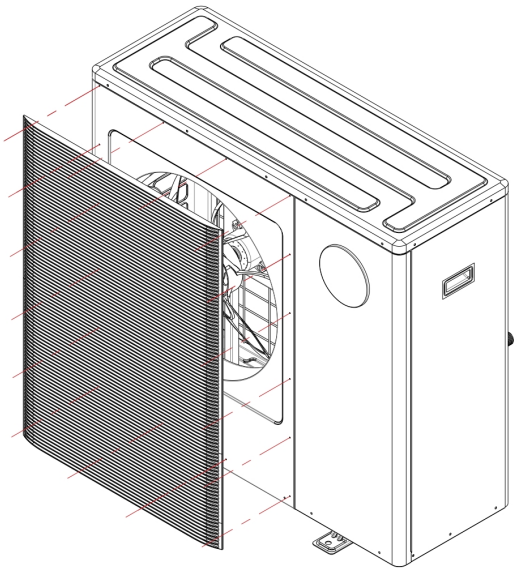

1. The grille is fixed to the front panel by 16 small black pan head M4*10 screws. When removing the grille, please note that the diameter of the gun head used must be less than grille gap of 7.5mm.

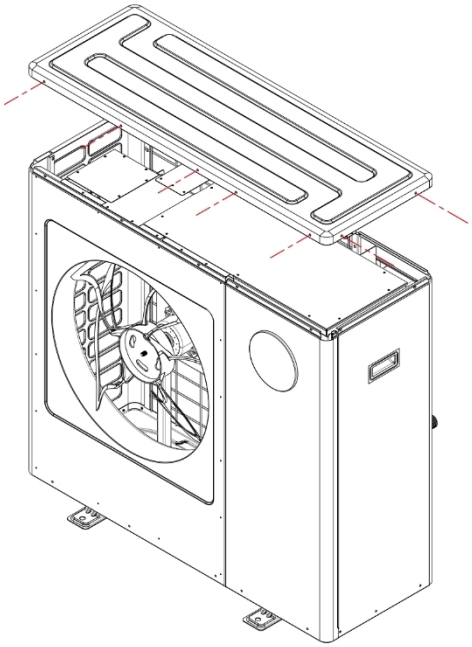

2. The top plate is fixed around by 12 black large pan head M4*10 screws. When removing the top plate, lift it up and do not forcibly remove it to avoid scratching the sheet metal.

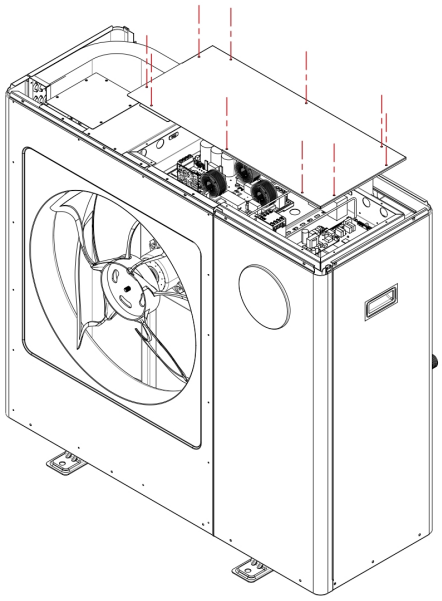

3. The electric control top cover is fixed by 10 black large pan head M4*10 screws around it. After it is removed, the electrical components can be inspected.

Installation instructions for SG and EVU signal lines

Wire specification

The specification of SG signal line and EVU signal terminal head is XH2.54-2P (there is no sequence requirement for this interface).

Wiring position

After the top cover of the electric control box is opened, the main control board is close to the junction box. As shown in the figure, the ports marked with ID5 and ID7 on the main control board are provided for customers to receive SG signals and EVU signals. The SG signal is connected to GND-ID5, and the EVU signal is connected to GND-ID7. After the wiring is completed, please refer to the steps for removing the electric control box and reinstall the top cover.

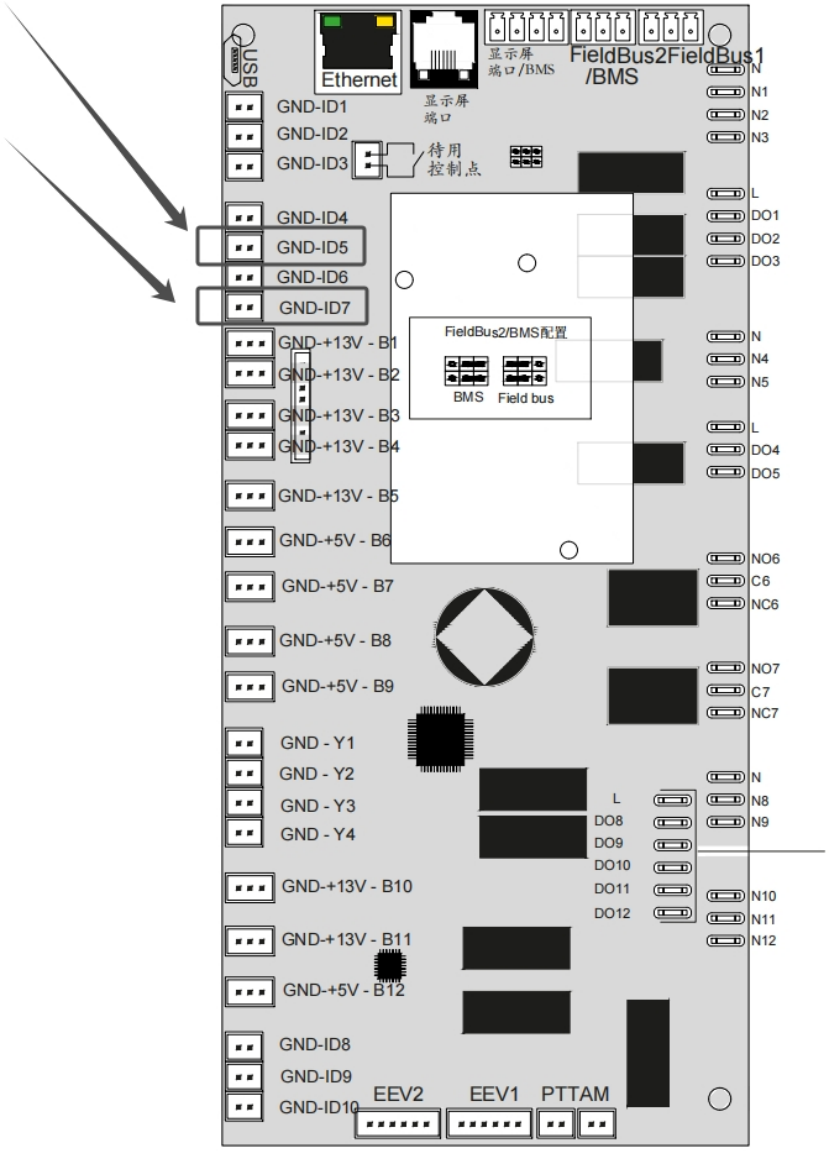

Installation of electric control box

After the wiring is completed, please refer to the steps of "Removal of electric control box" to install the top cover and grille of the electric control box.

8. Equipment Startup

8.1 Inspection before Startup

Safety precautions

DANGER

No live operation: Be sure to turn off the power when checking the electrical system!
Troubleshoot item by item: It is recommended to check each item according to the checklist to avoid omissions.
Handling of abnormality: If refrigerant leakage, electrical failure and other problems are found, they must be completely repaired before the equipment is started.

System integrity check

Equipment appearance inspection

1. Confirm that the unit and auxiliary equipment (water tanks, pipelines, etc.) are not damaged or deformed during transportation or installation.
2. Check whether all bolts, brackets and pipe joints are tightened to avoid loosening caused by vibration during operation.

Electrical system inspection

Power supply and grounding

1. Check that the power supply voltage and frequency are consistent with the requirements of the unit nameplate;
2. Check that the main power line and control line are connected correctly and the phase sequence is correct;
3. Ensure that grounding resistance is ≤4Ω and ensure reliable grounding.

Control system verification
1. Check whether the control panel parameter settings (such as water temperature setting and operation mode) are correct;
2. Test whether the installation position and signal feedback of sensors (temperature and pressure sensors) are normal;
3. Verify whether the safety protection devices (high and low pressure switches, water flow switches, overload protection) function

Waterway system inspection

After the water way of the unit is connected and the pressure is maintained, open the automatic water make-up valve to inject water into the water system. After the water injection is completed, manually turn on the built-in circulation pump of the unit and judge whether the waterway circulation is normal through the flowmeter reading. If the reading is normal, the water system is normal.

8.2 Unit Startup

Please scan the QR code below to access the user manual of the wired controller.

Deutsch

English

1. Click the cooling/heating start contact on the control panel to start the unit.
2. Check whether there are any abnormal alarms on the unit control panel.

9 Delivery

1. Explain the operation method of the product to users in detail, including how to start and stop the unit, how to adjust temperature and other functional operations.
2. Inform users whether the system is separated and how to ensure the normal operation of the antifreeze protection function so that users can understand the working principle and maintenance points of the system.
3. Specially point out safety warnings to users, emphasize safety precautions during product use, such as not touching moving parts and avoiding the use of open flames near equipment.
4. Explain the special risks and code of conduct related to R290 refrigerant to users, and inform them of the hazards of refrigerant leakage and countermeasures.
5. Make users realize the necessity of regular maintenance of products, introduce the maintenance cycle and basic content, and ensure the long-term stable operation of the product.

10 Fault Diagnosis

10.1 Fault Message

When the product fails, the indoor unit control display screen will display a fault code. The user can use the "Fault Message" table in the appendix of the Installation Manual of indoor unit to find the cause and solution of the fault and perform corresponding troubleshooting operations.

10.2 Other Faults

For other faults where no fault code is displayed, users can refer to the "Troubleshooting" table in the appendix of the Installation Manual of indoor unit, find possible causes according to the fault phenomenon, and take corresponding solutions.

11 Maintenance

11.1 Safety Precautions

DANGER

R290 refrigerant is flammable. Improper operation may cause fire or explosion. Untrained personnel are strictly prohibited from operating it. Inspection and maintenance work shall only be carried out by qualified professionals who understand the characteristics and risks of R290 refrigerant.

R290 leakage may form a flammable gas environment, which poses an explosion risk. Immediate measures must be taken in case of any leakage. If anyone is working with the product enclosure open, a gas detector must be used to ensure that there is no leakage. In case of leakage, the product enclosure should be closed immediately, the user should be notified and customer service should be contacted.
R290 is flammable and may cause fire or explosion when it comes in contact with ignition sources. Keep away from ignition sources during work, especially open flames, hot surfaces with temperatures above 370°C, electrical equipment or tools that are not powered off, and electrostatic discharge.

WARNING

Operation without power-off may cause electric shock, and poor grounding may cause electrical accidents.

CAUTION

Poor ventilation may cause R290 to accumulate and form an explosive environment. Please ensure that the space around the product is well ventilated to reduce the risk of flammable gas accumulation.
Before inspection, maintenance or installation of spare parts, follow basic safety rules to ensure safety and confirm that tools, equipment and personal protective equipment are complete to avoid injuries.
There is a risk of falling when working at heights. To work at heights, wear a safety belt and use fall protection equipment.
During working, protect all electrical components from water splashes and avoid electrical short circuits.

NOTICE

Please carry out maintenance in strict accordance with the specified intervals to ensure stable, safe and reliable product performance.

11.2 Safety Area Inspection

Check whether the safety area of the equipment is maintained to ensure that there are no subsequent building changes or installations that violate the safety area regulations to prevent affecting the safe operation of the product.

11.3 Equipment Cleaning

1. The product can only be cleaned after all housings and covers are properly installed in place to avoid damage to internal components during cleaning.
2. It is strictly forbidden to use high-pressure cleaning equipment or spray water directly on the product to prevent moisture from entering the equipment and causing damage.
3. It is recommended to use a sponge with warm water and neutral detergent to clean the product. It is not allowed to use abrasive cleaners, solvents, or cleaning products containing chlorine and ammonia to avoid damaging the surface of the product.

11.4 Enclosure Removal

1. Before removing the enclosure, use a gas detector to check for refrigerant leakage to ensure safe operation.
2. Remove only the enclosure part required for subsequent maintenance work, and operate as follows to avoid damage caused by unnecessary removal.
3. Carry out following work only when necessary or during maintenance and repair, and use a T20 self-tapping screwdriver.

11.5 Enclosure Installation

1. During installation, operate in the reverse order of the removal steps.
2. Please follow the diagram of the removed part (refer to 11.4) to ensure that the enclosure is installed correctly and firmly.

11.6 Inspection of Finned Radiators, Fans and Condensate Drainage

1. Use a soft brush to clean the gaps between the evaporator fins, avoid bending the fins, and ensure heat exchange efficiency.
2. If there are bent fins, use a fin comb to straighten them if necessary to restore normal air circulation.
3. Turn the fan manually to check whether it can run freely without jamming.
4. Remove dirt accumulated in the condensate tray or drain pipe to ensure smooth drainage.
5. Pour about 1L of water into the condensate tray to check whether the condensate can drain freely.
6. Ensure that the heating wire is correctly inserted into the condensate drain tank.

11.7 Inspection of Refrigerant Circuit

Inspection of component and pipeline status

1. Check whether all components and pipes in the refrigerant circuit are clean to ensure that there is no dirt or corrosion. Check whether there is rust or foreign matter attached to the surface of the components, whether the inner wall of the pipeline is smooth, and whether there are corrosion spots or pitting. Ensure that the refrigerant can circulate normally in the system and is not affected by impurities and corrosion.

Sealing performance test

1. Comprehensively check all key components in the circuit, including compressors, condensers, evaporators and expansion valves, and all refrigerant pipes connecting them. Check whether there are abnormalities such as damage, corrosion or oil leakage. Carefully check whether the enclosure has cracks or deformation, whether the pipeline is worn or broken, and whether there are signs of leakage such as oil stains at the connection parts. Any minor damage may cause leakage and affect system performance and safety.

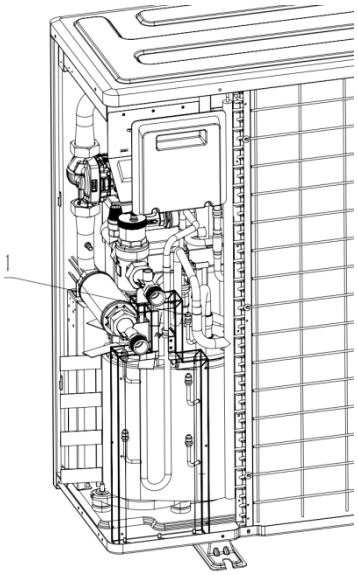

2. Confirm that the cap (1) at the maintenance interface is firmly installed and in the correct position. Check whether the cap is tightly fitted, not loose, and in good sealing condition to avoid refrigerant leakage and ensure the sealing and integrity of the refrigeration circuit.
3. Use a dedicated gas leak detector to detect system leakage. During the inspection, cover all components and pipelines, especially high-risk areas such as joints, valves, and welding parts. Move the detector slowly along the pipeline to monitor whether there is a refrigerant leakage signal in real time to ensure that no potential leakage point is missed.
4. Record the leakage test results in detail in the service manual, including the inspection date, name of the inspector, inspection equipment used, and inspection results (whether leakage is found, location and degree of leakage, etc.), to provides an important reference basis for subsequent maintenance and facilitates tracking of the system's operating status and maintenance history.

11.8 Inspection of Electrical Connection

1. Check whether the seals on the connection box are intact. Ensure that the seal fits the connection box tightly without cracks, damage or aging deformation to prevent dust, moisture, etc. from entering the connection box and affecting the stability and safety of the electrical connection.
2. Check whether the wires inside the connection box are firmly inserted into the plug or terminal. Ensure that the connection between the wire and the terminal is tight to avoid poor contact, ensure stable current transmission, and prevent electrical faults caused by poor contact, such as heating and sparking.
3. Check the grounding of the connection box to ensure that it is well grounded and the grounding resistance meets the requirements of the specification. **Good grounding can safely introduce fault current into the earth when a device has a leakage or other fault, thereby protecting personnel and equipment.
4. Check whether the power supply cable is damaged, such as broken outer skin and broken internal wires. If damage is found, it must be replaced by Borochi authorized customer service department or qualified professionals to prevent electrical accidents such as short circuit and electric shock caused by cable failure.
5. Check whether the connection between the internal wires of the equipment and the plugs or terminals is firm, and confirm that there is no damage to the wire body, such as damaged insulation layer or exposed wires. Ensure that the internal electrical connection of the equipment is reliable to avoid electrical failures affecting the normal operation of the equipment.

11.9 Inspection of Wear of Small Shock-absorbing Foot Pad

1. Check whether the shock-absorbing foot pad has obvious compression deformation. Under normal circumstances, the shock-absorbing foot pad should maintain good elasticity and shape. If it is over-compressed, its shock absorption effect may be weakened, resulting in large vibration and noise during equipment operation, or even damage to other components.
2. Check whether there are cracks on the surface of the shock-absorbing foot pad. Cracks will weaken the structural strength and reduce the shock absorption performance, and may expand over time, eventually leading to the failure of the shock-absorbing foot pad.
3. Check whether there is severe corrosion at the threaded connection of the shock-absorbing foot pad. Corrosion will affect the fastening effect and cause the shock-absorbing foot pad to loosen during equipment operation, thereby reducing equipment stability and shock absorption.
4. If the shock-absorbing foot pad is found to have the above problems or other signs of wear, it should be replaced in time. Timely procurement and installation of new shock-absorbing foot pad can ensure smooth operation of the equipment, reduce the impact of vibration on the equipment, and extend service life.

11.10 Completion of Inspection and Maintenance

1. Reinstall the previously removed enclosure to ensure that it is installed correctly and firmly. All components should be tightly connected to restore the protective function of the equipment and prevent dust, moisture, etc. from entering the equipment and affecting its performance and safety.
2. Close the disconnector connected to the equipment in the building, supply power to the equipment, and prepare for startup.
3. Start the equipment, observe various parameters and states during operation, such as temperature, pressure, sound and vibration, to determine whether the equipment is operating normally and whether the performance meets the expected indicators.
4. Carry out operation tests to simulate the working status of the equipment under actual working conditions, check whether the heating, cooling, circulation and other functions are normal, and whether the cooperation between various components is coordinated to ensure stable and reliable operation of the equipment.
5. Carry out safety tests to check the effectiveness of various safety protection devices, such as overload protection, leakage protection and overheating protection, to ensure that the equipment can be shut down in time under abnormal conditions and ensure the safety of personnel and equipment.

12 Repair and Service

12.1 Preparation for Refrigerant Circuit Repair

WARNING

Refrigerant circuit leakage poses a serious risk of fire or explosion because the product contains flammable refrigerant R290, which can easily form a flammable mixed gas once leaked and mixed with air.

1. Only personnel with professional refrigeration knowledge and proficient in handling R290 refrigerant can carry out this work. Ensure that maintenance personnel have sufficient professional ability and experience to deal with various complex situations during the refrigerant circuit repair process.
2. Before opening the product for repair, careful check with a gas detector that there is no refrigerant leakage. If leakage is found, close the product enclosure immediately to prevent the leakage from expanding, and notify the user and customer service department in time to take corresponding emergency measures.
3. During maintenance, keep all possible ignition sources away from the product, including open flames (such as lighters and matches), high-temperature surfaces (such as heating equipment, soldering irons and other objects with a temperature higher than 370°C), electrical equipment or tools that are not powered off (such as electric tools without turning off the power supply and ungrounded electrical equipment) and electrostatic discharge to avoid fire or explosion accidents.
4. Ensure good ventilation in the working area to reduce the risk of flammable gas accumulation.
5. Restrict unauthorized personnel from entering the protected area to avoid accidents.
6. Turn off all disconnect switches connected to the product in the building, disconnect the power supply but keep it grounded.
7. Restrict the working area and set up warning signs to prevent others from entering.
8. Wear appropriate personal protective equipment and carry fire extinguishers to ensure personnel safety.
9. Only use safety equipment and tools that are allowed to be used for R290 refrigerant to ensure repair safety.
10. Use appropriate gas detectors to monitor the atmosphere in the working area and detect the concentration of combustible gases.
11. Remove all ignition sources and take anti-static measures to prevent sparks.
12. Remove the top, front and right side enclosures to facilitate repair.

12.2 Removal of Refrigerant from Equipment

DANGER

There is a risk of fire and explosion if the refrigerant is removed by mistake.

1. Only qualified personnel can remove the refrigerant;
2. Wear personal protective equipment and keep fire extinguishers available during operation, use qualified tools and equipment to ensure safety.
3. Prevent air from entering the refrigerant circuit, tools and containers and refrigerant tanks to avoid the formation of flammable mixed gases.
4. Do not remove R290 refrigerant into the sewage system to prevent environmental pollution.
5. When there is no system to separate the refrigerant, discharge the heating water from the condenser before removing the refrigerant to prevent freezing and damage to the equipment.
6. Purchase tools and equipment required to remove refrigerant, such as pumping stations, vacuum pumps, recovery tanks and pressure gauges.
7. Only use tools and equipment that are allowed to be used with R290 refrigerant to ensure safety and compliance.
8. Use approved and properly labeled recovery cylinders equipped with pressure relief and isolation valves to prevent refrigerant leakage.
9. Ensure that the connecting hoses, joints and valves are sealed and working properly, and check the sealing with a gas detector.
10. Discharge the gas in the recovery tank and prepare to recover refrigerant.

11. Pump out refrigerant, pay attention to the maximum filling volume of the recovery cylinder, and monitor the filling volume with a calibrated scale to prevent excess.
12. Ensure that no air enters the circuit, tools and recovery cylinder to ensure the purity of the refrigerant.
13. Connect the double-ended pressure gauge to the high and low pressure sides of the refrigerant circuit, open the expansion valve to ensure that the circuit is completely emptied to avoid residual refrigerant.

12.3 Removal of Refrigerant Circuit Components

1. Flush the refrigerant circuit with nitrogen to remove impurities and residual refrigerant to ensure the cleanliness of the circuit;
2. Repeat the flushing and discharge process until there is no refrigerant in the circuit to ensure repair safety;
3. To remove the compressor containing compressor oil, drain the combustible refrigerant in the oil with sufficient negative pressure to ensure safety.
4. Establish atmospheric pressure to restore the circuit to a normal pressure state.
5. Open the refrigerant circuit with a pipe cutter. Do not use welding or tools that generate sparks and debris to prevent fire and explosion.
6. Remove the components. Note that after removal, the components may release refrigerant due to compressor oil. They should be properly stored and transported to avoid environmental pollution and safety accidents.

12.4 Installation of Refrigerant Circuit Components

1. Correctly install the components by welding only to ensure that the connection is firm and reliable.
2. Use nitrogen to pressure test the refrigerant circuit, check the circuit sealing and pressure resistance, and ensure the safe operation of the system.

12.5 Filling of Refrigerant into Equipment

DANGER

There is a risk of fire and explosion if the refrigerant is removed by mistake.
1. Only qualified personnel can remove the refrigerant;
2. Wear personal protective equipment and fire extinguishers during operation, use qualified tools and equipment to prevent accidents.
3. Prevent air from entering the refrigerant circuit, tools and containers and refrigerant cylinders to ensure the purity of the refrigerant.
4. Emphasize that the use of incorrect or contaminated refrigerant will damage the product. Use unused R290 refrigerant with a purity of at least 99.5% to ensure product performance.
5. Purchase tools and equipment required for filling refrigerant, such as vacuum pumps, refrigerant cylinders and scales.
6. Use only tools and equipment that are permitted for use with R290 refrigerant, as well as properly labeled refrigerant cylinders, to ensure operation as regulated.
7. Ensure that the connecting hoses, joints and valves are sealed and working properly.

12.6 Completion of Repair and Service

1. Install the enclosure removed before installation, ensure that each component is installed in place, the screws are tightened, and the gaps between the enclosures are uniform, restore the integrity and protection function of the equipment, and prevent impurities such as dust and moisture from entering the equipment and affecting the normal operation of the equipment.
2. Connect the power supply of the product to ensure that the power connection is stable and normal without looseness or short circuit, so as to provide necessary power support for product startup.
3. Start the product and observe the various states of the equipment during the startup process, such as whether there are abnormal noises and vibrations, to determine whether the equipment can start normally.

4. Temporarily activate the heating mode and check the various performance indicators of the equipment under the heating state, including heating speed, temperature stability, and circulation system working conditions, to ensure that the heating function of the equipment is normal.
5. Use gas detectors to detect leakage of products, carefully check the various connection parts, pipeline interfaces, valves and other places where leakage may occur in the equipment, ensure that there is no refrigerant leakage in the equipment, ensure the safe operation of the equipment, and avoid safety accidents and environmental pollution caused by leakage.

13 Product Suspension

13.1 Temporary Suspension

1. Turn off all isolating switches connected to the product in the building, cut off the power supply of the equipment, prevent the equipment from consuming power or accidentally starting when not in use, and ensure personnel safety.
2. Disconnect the product from the power supply, but keep the product grounded to avoid damage to the equipment due to static electricity accumulation or leakage, and also provide safety protection for possible subsequent operations.
3. If there is a risk of frost damage, such as when the equipment is not used for a long time in a cold environment, drain the heating water in the product to prevent the water from freezing and expanding and damaging the internal components of the equipment, such as pipes and heat exchangers.

13.2 Product Scrapping

DANGER

There is a risk of causing fire or explosion and death when transporting equipment containing R290 refrigerants which is flammable. During transportation, if the equipment is not protected by its original packaging, the refrigerant circuit may be damaged, resulting in refrigerant leakage. After the refrigerant mixes with air, it is easy to form a flammable mixed gas, causing fire or explosion accidents.
1. Ensure that the refrigerant is properly removed before transporting the product to reduce transportation risks. For specific operations, please refer to the relevant steps in 12.2. Use professional tools and equipment and follow the prescribed procedures to remove the refrigerant to ensure that the refrigerant removal is thorough and safe.
2. Turn off all disconnectors connected to the product in the building, cut off the power supply, ensure that the equipment is in a de-energized state, and prevent electric shock accidents during subsequent operations.
3. Disconnect the product from the power supply, but keep the product grounded to release static electricity that may accumulate on the equipment and avoid damage to equipment and personnel due to accidental electrification.
4. Drain the heating water in the product to prevent it from corroding the components or causing damage due to freezing during the idle period of the equipment, and ensure that the inside of the equipment is dry and clean.
5. Remove the top, front and right side enclosures of the product to facilitate further processing of internal components, and check whether there are any parts that are damaged or require special treatment.
6. Remove the refrigerant from the product according to the method in 13.2, ensure that the refrigerant is safely and thoroughly removed, and reduce pollution to the environment and safety hazards.
7. Install the right, front and top enclosures back to protect the internal components of the equipment from damage during subsequent handling and transportation.
8. Use clearly visible labels to identify products, indicate that the product has been decommissioned and the refrigerant has been completely removed, sign your name and date, and provide clear records of product decommissioning for subsequent management and tracking.
9. According to relevant laws and regulations, recycle the removed refrigerant to ensure that the refrigerant is disposed of reasonably and safely to avoid damage to the environment. Note that the recycled refrigerant must be cleaned and inspected before being used again to ensure its quality and safety.

10. Properly dispose of or recycle products and their components in accordance with regulatory requirements, promote the recycling of resources, reduce the impact of waste on the environment, and ensure that the disposal process meets environmental protection and safety standards.

14 Recycling and Disposal

14.1 Packaging Disposal

Properly handle the packaging materials of products, classify, recycle or dispose of them in accordance with local environmental protection laws and regulations, and ensure that packaging waste will not pollute the environment. For example, send recyclable cardboard, plastic and other materials to designated recycling stations, and safely landfill or otherwise dispose of non-recyclable materials.

14.2 Refrigerant Disposal

Ensure that the correct protective measures are taken during the transportation of refrigerants, and use special refrigerant transport containers that are well-sealed and are able to withstand pressure to prevent refrigerant leakage. Transport vehicles should be equipped with appropriate fire extinguishing equipment and leakage detector.

15 Customer Service

You can contact our customer service department in the following ways:
1. Visit our official website www.borochi.de to find the customer service portal. We provide a variety of services including FAQs, problem feedback, online customer service, telephone consultation on the website so that you can obtain the information and support you need more conveniently.
2. Contact us directly through our customer service email service@borochi.de.

16. Technical Parameters

Model		BWP-8	BWP-10
Heating Mode			
Ambient Temperature: DB7°C/WB6°C Water Inlet/Outlet: 30/35°C	Heating Capacity [kW]	8,3	10
	Power Consumption [kW]	1,65	2,1
	COP	5.0	4,8
Ambient Temperature: DB2°C/WB1°C Water Inlet/Outlet: 30/35°C	Heating Capacity [kW]	8	9,6
	Power Consumption [kW]	2,1	2,6
	COP	3,8	3,7
Ambient Temperature: DB-7°C/WB-8°C Water Inlet/Outlet: 30/35°C	Heating Capacity [kW]	7,8	9,4
	Power Consumption [kW]	2,5	3,1
	COP	3,1	3
Ambient Temperature: DB-10°C/WB-11°C Water Inlet/Outlet: 30/35°C	Heating Capacity [kW]	7,6	9
	Power Consumption [kW]	2,7	3,3
	COP	2,8	2,7
Ambient Temperature: DB7°C/WB6°C Water Inlet/Outlet: 50/55°C	Heating Capacity [kW]	7,8	9,5
	Power Consumption [kW]	2,5	3,1
	COP	3,1	3,1
Cooling Mode			
Ambient Temperature: DB35°C/WB24°C Water Inlet/Outlet: 12/7°C	Cooling Capacity [kW]	6,7	7,4
	Power Consumption [kW]	2,1	2,5
	EER	3,2	3
Ambient Temperature: DB35°C/WB24°C Water Inlet/Outlet: 23/18°C	Cooling Capacity [kW]	8	9
	Power Consumption [kW]	2,2	2,5
	EER	3,7	3,6
Efficiency			
Energy Efficiency Class	EN14825, W35°C	A+++	
	EN14825, W55°C	A+++	
SCOP	EN14825, W35°C	4,87	4,85
	EN14825, W55°C	3,83	3,68
SEER	EN14825, W7°C	4,3	4,4
	EN14825, W18°C	4,6	4,7
General Data			
Refrigeration Cycle	Refrigerant Type	R290	
	Refrigerant Content [kg]	0,89	

	ODP	0	
	GWP	3	
	CO2 Equivalent [kg]	2,67	
	Max. Pressure of the Refrigerant System [MPa]	3	
	Min. Pressure of the Refrigerant System [MPa]	0,1	
	Compressor Type	Inverter / Rotation	
Fan	Quantity [Pcs]	1	
	Airflow [CMH]	2900	3000
	Rated Power [W]	60	65
Water Side Heat Exchange	Type	Plate Heat Exchanger	
	Water Pressure Drop [kPa]	18	
	Connection Inlet/Outlet [mm]	DN25	
	Rated Power of the Circulation Pump [W]	25	28
	Water Flow [L/s]	0,38	0,48
Basic Functions		Heating / Cooling / Domestic Hot Water Production	
Additional Functions		SG-Ready / WIFI / APP	
Rated Voltage [Ph/V/Hz]		1-phase/220~240/50	
Maximum Starting Current [A]		25	28
Overcurrent Protection [A]		20	
Ingress Protection (IP) Rating		IPX4	
Workable Ambient Temperature Range [°C]		-20 ~ 45	
Power of the Auxiliary Electric Heating [kW]		3	
Maximum Water Outlet Temperature [°C]		75	
Sound Pressure Level, EN 12102-A7/W55 bei 1 m [dB(A)]		46	
Sound Power Level, EN 12102-A7/W55 [dB(A)]		59	
Sound Power Level, Silent Mode [dB(A)]		48	
Net Dimension (W×H×D) [mm]		1100× 1025 × 400	
Net Weight [kg]		120	
Warranty		5 Years	
Certification		EN 60335-1:2012/A16:2023; EN IEC 60335-2-40:2023/A11:2023; EN 62233:2008; EN IEC 55014-1/2:2021; EN IEC 61000-3-11:2019; EN	

	61000-3-12:2011; EN 14511-1/2/3/4:2022; EN 14825:2022; EN 12102-1:2022

17 Appendix

17.1 System Circulation Diagram

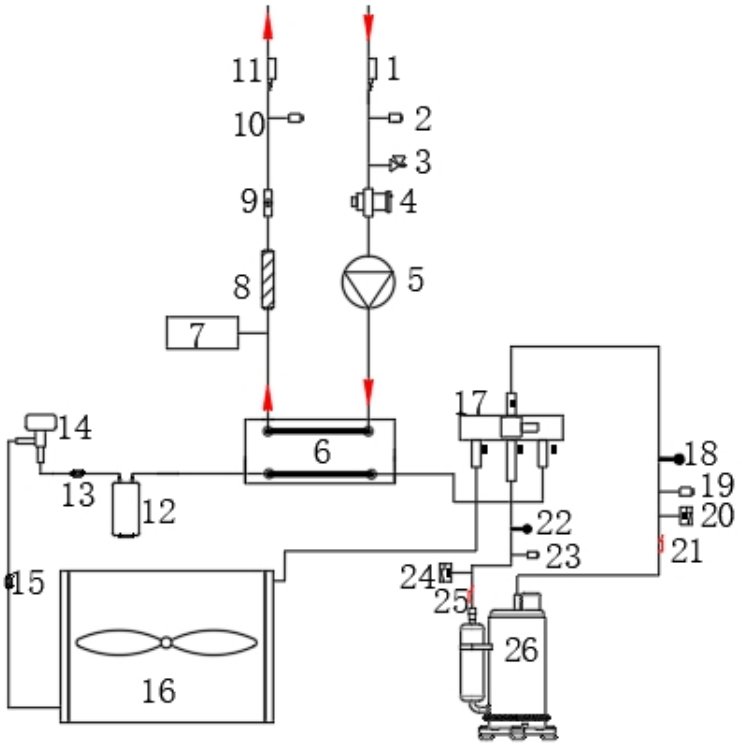

1	Inlet water temperature sensor	2	Water inlet pressure sensor
3	Safety valve	4	Microbubble exhaust valve
5	Water pump	6	Plate heat exchanger
7	Expansion tank	8	Tubular electric heater
9	Flowmeter	10	Water outlet pressure sensor
11	Water outlet temperature sensor	12	Fluid cylinder
13	Drier filter	14	Expansion valve
15	Filter	16	Finned heat exchanger
17	Four-way reversing valve	18	Needle valve

19	High pressure sensor	20	High pressure switch
21	Exhaust temperature sensor	22	Needle valve
23	Suction pressure sensor	24	Low pressure switch
25	Suction temperature sensor	26	Compressor

17.2 Fault Message Table

Overview of Fault Messages		
Code	Fault Description	Recommended Action
E01	Frequent writes to storage type variable	1. Try disconnecting the power supply and powering on again to perform a reset 2. Contact the manufacturer for professional inspection (software reset and reprogramming)
E02	Storage variable write error alarm	
E03	Inlet water temperature sensor fault or offline	1. Check whether the sensor is loose or damaged 2. Replace with the same model sensor
E04	Outlet water temperature sensor fault or offline	
E05	Ambient temperature sensor fault or offline	
E06	Condensing temperature sensor fault or offline	
E07	Water flow switch alarm	1. Check the water system for insufficient water and refill if necessary 2. Contact a professional to inspect the water flow switch and replace it if damaged
E08	Phase sequence protection alarm	Contact a qualified electrician to check the power supply phase sequence
E09	Unit operation timeout warning	1. Stop the unit, disconnect power, perform a reset, and restart 2. If the issue persists, contact a professional technician
E10	Water pump operation timeout warning	
E11	Compressor operation timeout warning	
E12	Condenser fan operation timeout warning	
E13	BLDC compressor start-up differential pressure too high	Compressor operating abnormally. Please contact a qualified service technician for inspection
E14	BLDC compressor fault	
E15	BLDC compressor operating in abnormal region	
E16	BLDC compressor start failure (retry)	
E17	BLDC compressor start failure (lockout)	
E18	BLDC compressor differential pressure too low	
E19	BLDC compressor discharge temperature too high	
E20	Operating region alarm 2: High compression ratio	

E21	Operating region alarm 3: High discharge pressure	
E22	Operating region alarm 4: High current	
E23	Operating region alarm 5: Low suction pressure	
E24	Operating region alarm 6: Low compressor ratio	
E25	Operating region alarm 7: Low differential pressure	
E26	Operating region alarm 8: Low discharge pressure	
E27	Operating region alarm 9: Low suction pressure	
E28	Operating region alarm 10: High discharge temperature	
E29	01: Inverter overcurrent	Inverter operating abnormally. Please contact a qualified service technician for inspection
E30	02: Inverter motor overload	
E31	03: Inverter DC bus overvoltage	
E32	04: Inverter DC bus undervoltage	
E33	05: Inverter drive temperature too high	
E34	06: Inverter below operating temperature	
E35	07: Inverter hardware overcurrent	
E36	08: Inverter motor overtemperature	
E37	09: Inverter IGBT module error	
E38	10: Inverter CPU error	
E39	11: Inverter default parameter load error	
E40	12: Inverter bus voltage ripple too high	
E41	13: Inverter communication error	
E42	14: Inverter NTC fault	
E43	15: Inverter auto-tuning failed	
E44	16: Inverter unable to run	
E45	17: Inverter output phase loss	
E46	18: Inverter internal fan fault	
E47	19: Inverter speed fault	
E48	20: Inverter PFC module fault	
E49	21: Inverter PFC overvoltage	
E50	22: Inverter PFC undervoltage	
E51	23: Inverter STO detection fault	
E52	24: Inverter STO detection fault	
E53	25: Inverter ground fault	
E54	26: Inverter internal fault 1	
E55	27: Inverter internal fault 2	
E56	28: Inverter drive overload	

E57	29: Inverter safety fault	
E58	98: Inverter unexpected restart	
E59	99: Inverter unexpected shutdown	
E60	01: Inverter protection - current detection fault	
E61	02: Inverter protection - current imbalance	
E62	03: Inverter protection - overcurrent	
E63	04: Inverter protection - STO fault	
E64	05: Inverter protection - STO hardware fault	
E65	06: Inverter protection - power supply missing	
E66	07: Inverter protection - hardware buffer alarm	
E67	08: Inverter protection - heater control fault	
E68	09: Inverter protection - communication fault	
E69	10: Inverter protection - compressor locked-rotor alarm	
E70	11: Inverter protection - bus overcurrent fault	
E71	12: Inverter protection - bus current hardware alarm	
E72	13: Inverter protection - bus voltage alarm	
E73	14: Inverter protection - bus voltage hardware alarm	
E74	15: Inverter protection - input voltage alarm	
E75	16: Inverter protection - input voltage hardware alarm	
E76	17: Inverter protection - bus power alarm	
E77	18: Inverter protection - power mismatch fault	
E78	19: Inverter protection - NTC overtemperature	
E79	20: Inverter protection - below operating temperature	
E80	21: Inverter protection - NTC fault	
E81	22: Inverter protection - hardware sync fault	
E82	23: Inverter protection - invalid parameter	
E83	24: Inverter protection - firmware fault	
E84	25: Inverter protection - hardware fault	
E85	26: Inverter protection - reserved	
E86	27: Inverter protection - reserved	
E87	28: Inverter protection - reserved	
E88	29: Inverter protection - reserved	
E89	30: Inverter protection - reserved	
E90	31: Inverter protection - reserved	
E91	32: Inverter protection - reserved	
E92	Inverter offline	1. Contact a qualified service

		technician for inspection 2. Check whether the communication cable between the main controller and the inverter is loose 3. Check whether the inverter communication baud rate and address are set correctly
E93	EEV alarm - Low superheat warning	1. Contact a qualified service technician for inspection 2. Check whether the expansion valve connection cable on the main control board is loose 3. Check whether the expansion valve coil is loose 4. Replace with a new expansion valve coil
E94	EEV alarm - Low suction pressure	
E95	EEV alarm - High suction pressure	
E96	EEV alarm - High condensing temperature	
E97	EEV alarm - Low suction temperature	
E98	EEV alarm - Motor fault	
E99	EEV alarm - Adaptive control failed	
E100	EEV alarm - Emergency valve close	
E101		
E102		
E103	EEV alarm - Structure parameter configuration error	
E104	EEV alarm - Forced position value out of range	
E105	EEV alarm - Valve ID out of range	
E106	Low suction pressure alarm	1. Contact a qualified service technician for inspection 2. Check whether the sensor is damaged 3. Check whether the expansion valve is damaged 4. Check whether the water pump and fan are operating normally 5. Check whether the outdoor unit air inlet is blocked 6. Check whether the refrigeration system has a refrigerant leak
E107	High discharge pressure alarm	
E108	Discharge temperature sensor fault or offline	1. Check whether the sensor is loose or damaged 2. Replace with the same model sensor
E109	Suction temperature sensor fault or offline	
E110	High pressure sensor fault or offline	
E111	Low pressure sensor fault or offline	
E112	Solar temperature sensor fault or offline	
E113	Reserved	
E114	Reserved	

E115	Pump flow rate alarm	1. Check whether the water system is short of water 2. Check whether the inlet and outlet valves are closed or not fully open 3. Check whether the pipeline filter is clogged
E116	High outlet water temperature alarm	
E117	Low outlet water temperature alarm	
E118	Excessive inlet-outlet water temperature difference alarm	
E119	Reserved	
E120	Reserved	
E121	Reserved	
E122	Reserved	
E123	Reserved	
E124	Reserved	
E125	Reserved	
E126	Reserved	
E127	Reserved	
E128	Reserved	
E129	Reserved	
E130	Electric heater overload alarm	1. Contact a qualified service technician for inspection 2. Check whether the sensor is damaged 3. Check whether the water pump is operating normally 4. Check whether the inlet and outlet valves are closed or not fully open 5. Check whether the pipeline filter is clogged
E131	High pressure switch alarm	1. Contact a qualified service technician for inspection 2. Check whether the sensor is damaged 3. Check whether the expansion valve is damaged 4. Check whether the water pump and fan are operating normally 5. Check whether the outdoor unit air inlet is blocked 6. Check whether the refrigeration system has a refrigerant leak
E132	Low pressure switch alarm	
E133	Reserved	
E134	Condenser coil temperature sensor fault or offline	1. Check whether the sensor is loose

E135	Auxiliary electric heater feedback temperature sensor fault or offline	or damaged 2. Replace with the same model sensor
E136	R290 refrigerant limit exceeded alarm	1. Stop the unit immediately and disconnect the power supply 2. Contact a qualified service technician for inspection 3. Check whether the refrigeration system has a refrigerant leak 4. Check whether the sensor is damaged
E137	Fan drive communication offline alarm	1. Check whether the fan connection cable is loose 2. Check whether the fan driver board is damaged 3. Check whether the fan driver communication baud rate and address are set correctly
E138	Inlet water pressure sensor fault or offline	1. Check whether the sensor is loose or damaged 2. Replace with the same model sensor
E139	Outlet water pressure sensor fault or offline	
E140	Tank temperature sensor fault or offline	
E141	Flow meter sensor fault or offline	
E142	Electric meter offline alarm	1. Check whether the energy meter connection cable is loose 2. Check whether the energy meter is damaged 3. Check whether the energy meter communication baud rate and address are set correctly
E143	Maximum sterilization time reached reminder	Manually activate the tank sterilization function
E144	R290 sensor offline alarm	1. Check whether the sensor is loose or damaged 2. Replace with the same model sensor
E145	Wired controller communication fault	1. Check whether the wired controller communication cable is properly connected 2. Check whether the wired controller communication wiring sequence is correct 3. Check whether the wired controller is damaged

E-mail: service@borochi.de

Web: www.borochi.de

Add: Alt-Moabit 2, 10557 Berlin, Germany